NO. 30 NOTES FROM THE SHOP $2.50

Woodsmith®

ROUND DINING TABLE

GALLERY (ROUND) CLOCK
CHEVAL MIRROR

SPECIAL REPORT:
OIL FINISHES

Woodsmith

Number 30 Nov/Dec, 1983

Editor
Donald B. Peschke

Design Director
Ted Kralicek

Assistant Editors
Steve Krohmer
Michael P. Scott

Assistant Art Director
Kay Mulder

Technical Illustrators
David Kreyling
Mike Henry

Subscription Manager
Sandy J. Baum

Subscription Assistants
Christel Miner
Vicky Robinson
Jackie Stroud
Shirley Feltman

Computer Operations
Ken Miner

Circulation Manager
Jeff Farris

Administrative Assistant
Cheryl Scott

Building Maintenance
Archie Krause

WOODSMITH (ISSN 0164-4114) is published bimonthly (January, March, May, July, September, November) by Woodsmith Publishing Co., 2200 Grand Ave., Des Moines, Iowa 50312.
WOODSMITH is a registered trademark of the Woodsmith Publishing Co.
©**Copyright 1983** by Woodsmith Publishing Co. All Rights Reserved.
Subscriptions: One year (6 issues) $10, Two years (12 issues) $18. Single copy price, $2.50 (Canada and Foreign: add $2 per year.)
Change Of Address: Please be sure to include both your old and new address for change of address. Mail to: Woodsmith, 2200 Grand Ave., Des Moines, Iowa 50312.
Second class postage paid at Des Moines, Iowa.
Postmaster: Send change of address notice, Form 3579, to Woodsmith Publishing Co., 2200 Grand Ave., Des Moines, Iowa 50312.

BACK ISSUES

A list of the contents of all back issues appears on the wrapper of this issue. If the wrapper is missing, you can send for a booklet describing the contents and prices of all back issues.

SAMPLE COPIES

If you have a friend who would like to see a copy of **Woodsmith**, just send the name and address, and we'll send a sample (at no cost).

Sawdust

ABOUT THIS ISSUE. All three projects in this issue use spline joinery. The splines are used to join mitered pieces together to form frames, which, for these projects, are then routed into circular shapes. But we also used splines on the Cheval Mirror stand to join the legs and stretcher to the uprights.

So what's the big deal? You make it sound like you discovered a new joint.

Not a new joint, just a replacement for an old joint that I've always had trouble with. In the past I might have used dowels to make joints like this. But dowels can create more problems than they're worth.

Granted, dowel joinery sounds easy — just drill two holes, stick a dowel in them and the joint is made.

But using dowels to join two mitered pieces is (in my opinion) one of the most difficult operations in woodworking. The problem is that either the wood or the drill bit has to be angled to drill opposing holes in each mitered edge. And these holes have to be perfectly aligned. Not just in one direction, but in a full 360°. And that's what causes problems.

Question: So, if you don't like dowels, what's your alternative?

Answer: I prefer to use splines. This joinery technique doesn't receive much attention. But it's an extremely versatile joint that I find myself using more and more — particularly to replace dowels.

This all started about four years ago when I was building an octagonal frame for a clock. I used dowels to join the mitered ends of the frame . . . and had a lot of problems.

Imagine, eight pieces with miters on both ends. That's 16 miters and each miter with two dowel holes — 32 dowel holes that all had to be perfect. I got that frame together, but I had to "cheat" more than once.

Now I use splines. This requires grooves which can be cut with relative ease on with the new jig we're showing on page 22.

Once the grooves are cut, the splines are cut to fit, and glued in place. At this point the splines can be thought of as flattened-out dowels . . . but with more surface area, which provides more gluing surface and makes the joint much stronger.

OIL FINISHES. When it comes to finishing a project, there's an old proverb: One woodworker's favorite finish is another's mayonnaise.

Not too long ago a reader wrote in to say he'd discoverd the finest finish of all time: a mixture of mayonnaise and cigarette ashes. We had a good chuckle. Then it dawned on me that the reader wasn't all that far off target.

He was using a finishing technique that essentially relied on oil (in the case of mayonnaise, a vegetable oil), some solids in the mayonnaise to give the finish some substance, plus cigarette ashes to add a little color.

Although I probably wouldn't use mayonnaise (vegetable oil will turn rancid), I am very fond of oil finishes. This really hit home when I was ready to finish the round table shown in this issue.

In the past, I probably would have used a "normal" polyurethane finish on this table. And there would have been the long wait for the finish to dry before I could fix all the usual problems: bubbles, brush marks, and drips.

But instead of facing those old problems, I decided to use Sutherland Welles' tung oil and polyurethane mixture. As I applied it, there were still bubbles and brush marks . . . but I didn't have to wait to fix them. Apply the oil, then wipe it off — along with all the problems. I have a lot more confidence in the way the finish will turn out now.

NEW FACES. Back in October, on the day we moved out of our old offices and into our new building, Mike Henry happend to stop in to see if we had a job opening in the art department.

At the time, there was much confusion, I was tired, and the only job we had available involved moving box after box of who-knows-what. We gave Mike a copy of *Woodsmith*, and asked him to come back in a few days when the dust settled.

Mike came back four days later. By then he had designed and built a trestle table, drew 16 pieces of artwork showing how the table was built, and managed to lay out everything the way we need it for an issue.

We hired him, and immediately put him to work on some of the art for this issue. Mike is already proving to be a good addition to the staff.

ANOTHER NEW FACE. In the last issue we ran a picture of the outside of our new building. The inside is even nicer — thanks in large part to Kay Mulder who designed the office layout. It's an "open plan" arrangement of a modular office system (Herman Miller).

For six months, Kay worked with us on every detail of the new office. As soon as she was done, we asked her to join us full time. Now she's putting her skills to work on the artwork in the issue, photography, and will be in charge of production (getting the issue to the printer on time).

NEXT MAILING. *Woodsmith* No. 31 will be mailed the week of February 20, 1984.

Tips & Techniques

THREADING THREADED INSERTS

I read with interest how you used threaded inserts on the modular storage units in *Woodsmith* No. 22. Since then, I've used them for several different projects — with varying degrees of success.

The problem I'm always faced with is how to prevent the threaded inserts from veering off course as they're threaded into the workpiece. By the time the inserts are completely embedded, they're angled so far off to one side that they can't even be used.

Finally, I came up with a method for installing threaded inserts that works every time — using a drill press. First, I chuck a 3" long machine bolt in the Jacobs chuck on the drill press. (Most Jacobs

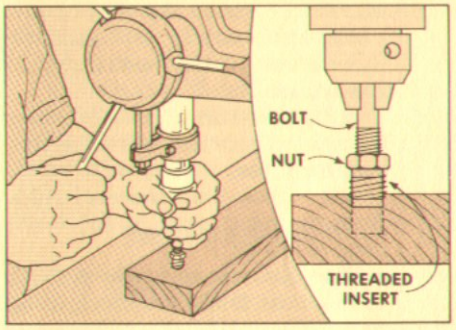

chucks will open wide enough to accept the head of the bolt, yet still allow the jaws to wrap around and tighten on the shank of the bolt itself. If not, simply cut off the head of the bolt.)

To install the insert, thread it and a nut on the bolt, and tighten the two together. Then align the short unthreaded shaft of the insert into the pre-drilled hole in the workpiece. Apply light pressure with the control arm of the drill press, and rotate the chuck in a clockwise direction to thread the insert into the workpiece.

When the insert is completely embedded, lock the spindle in place, and back off the nut from the top of the insert. Then unlock the spindle, and unthread the bolt from the insert while slowly releasing pressure on the control arm.

Jim Knowles
Atlanta, Georgia

SIZING IT UP

I just recently completed stacking some of the random length pieces of wood that always seem to collect around the shop. Unfortunately, more times than not this effort is useless. As soon as the pieces are stacked, it's often impossible to determine the actual size of any individual piece without unstacking the entire pile above the piece in question.

After my most recent episode of unstacking these random pieces, it finally occurred to me how to eliminate this problem. By simply writing down the usable measurements on the ends of each piece with a felt tipped pen, it becomes easy to locate a piece close to the size needed.

And I've found that by using my own special codes, I can even identify burls and other unique pieces.

Robert Drake
Keystone Hts., Florida

A SABRE SAW TABLE

Due to the limited size of my shop (and the limited size of my budget), I need to have my tools perform multiple functions whenever possible. So after I built the router table in *Woodsmith* No. 20, I decided to add two metal brackets under the table top for attaching my sabre saw. Now, with the sabre saw securely anchored to the table top, I can do many of the operations which previously could only be done safely with a jig-saw.

Although the setup varies depending on the model of sabre saw used, the basic idea is the same. First, I flipped the router

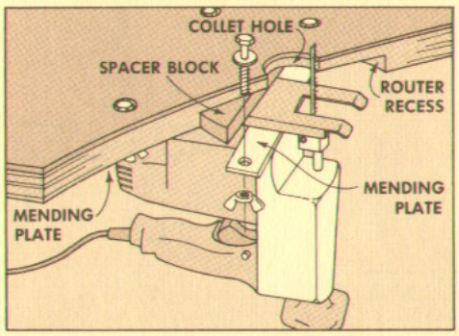

table top upside down, and positioned the base of the sabre saw over the collet hole so there was enough room to easily change the blade. Then I used two 1" x 10" mending plates (available from any hardware store) as brackets to sandwich the base of the sabre saw to the bottom of the router table top.

The mending plates (and the sabre saw) are secured to the top with ¼" machine bolts countersunk in the surface of the table. Then the bolts are secured with wingnuts to make tightening the brackets easy.

Since the router table was designed for a router, there's a ½" deep recess for the base of the router. To mount the sabre saw, I shimmed out the recess so that it's flush with the bottom surface of the table top. This shim prevents the base from tilting as the brackets are tightened.

Granted, this setup isn't much competition for a true jig saw. But with only a $2 to $3 investment, and the space limitations in my shop, it works like a charm.

Mark Bryan
Enid, Oklahoma

ROUTER TABLE INSERTS

I've completed the router table shown in *Woodsmith* No. 20, and there's one change I've made to the original design that may be of interest to some of your readers. I've found that there are some projects and routing techniques that require a smaller opening around the router bit than the 1¾" collet hole specified in the plans.

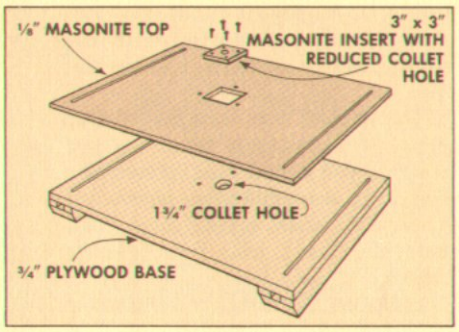

To solve this problem, I cut a 3" square hole (located directly over where the router recess will be cut) in the Masonite top before gluing it to the ¾" fir plywood. Then the router table top was constructed in the normal manner.

After the top is assembled, I cut out four ⅛" Masonite inserts to fit the 3" square hole in the top. Preferably, the inserts should be cut from the same piece of Masonite as the top.

Then a different size collet hole is cut in each insert. I use 1¾", 1⅝", 1", and ½" diameter collet holes, but any size will work. Secure the inserts to the top by countersinking screws in each corner.

Elvin Carlson
Topeka, Kansas

SEND IN YOUR IDEAS

If you'd like to share a woodworking tip with other readers of *Woodsmith*, send your idea to: *Woodsmith*, Tips & Techniques, 2200 Grand Ave., Des Moines, Iowa 50312.

We pay a minimum of $10 for tips, and $15 or more for special techniques (that are accepted for publication). Please give a complete explanation of your idea. If a sketch is needed, send it along; we'll draw a new one.

Cheval Mirror

A NEW SLANT ON YOUR IMAGE

One of the biggest problems with a full-length mirror is that it's never at the right height. No matter where it's hung on the wall, it's almost impossible to keep from looking either "headless" or "legless," or both. To remedy this problem, I built a cheval mirror — a full-length mirror that swivels on a stand.

This mirror consists of an arched-top frame that's attached to a two-post stand. But the fun part is building the frame for the mirror.

THE ARCHED TOP

The mirror frame is built with nine separate pieces: a four-sided arched top, a three-sided bottom, and two straight sides. I started with the most difficult section, the arched top.

The arched top consists of four pieces of 5/4 oak (1 1/16" thick) that are mitered and joined with splines, see Fig. 1. To assemble these pieces, rip a board 3½" wide, and 37" long. Then cut this board into four 9"-long pieces.

MITERING. To form the arch, miter both ends of all four pieces at 22½° so their final length is 8¾" from point to point, see Fig. 2.

CUT GROOVES. Next, cut grooves (for splines) in the mitered ends of all four pieces. To do this, rout a 1¾"-long by ½"-deep slot in the mitered ends of all four pieces, see Fig. 2. (I used a ¼" straight router bit and the router jig shown on page 22.)

Then hardwood splines are cut to fit the slots so the grain of the spline runs at right angles to the joint. (For more information about this joint, see Shop Notes on page 9.)

ASSEMBLY. After the splines are cut to fit, the four pieces are glued up, two sections at a time. Apply glue to the miters, insert the splines, and hold two pieces together for two or three minutes. (Clamps are not needed; hand pressure alone will produce a good joint.

TRIM ENDS. At this point, the arch should form a half circle, with mitered ends perfectly aligned in a straight line, refer to Fig. 3. Unfortunately, this rarely is the case. Usually, when a straight edge is butted across the ends of the arch, only the toe or the heel of the miters touch the straight edge.

Correcting any error on the ends of the arch is important. Unless they're perfectly aligned, the long sides (B) of the mirror frame will either be toed in, or toed out.

To correct the alignment of the miters, tack the assembled arch to a piece of plywood and use a table saw to remove only enough material to produce a fresh cut completely across the miters. (For more information, see Shop Notes, page 9.)

ROUTING THE ARCH

To round out of this mitered assembly, two radius cuts are made using a router with a trammel point attachment. When doing this, it's best to leave the arch tacked to the plywood, and clamp the plywood to a workbench to secure everything during the routing operation.

When using a trammel attachment, the pivot point must be at the same height as the workpiece itself. So I attached a small piece of 5/4 scrap to the plywood to serve as a base, see Fig. 3.

Then locate the pivot point by using a straight edge to extend the joint lines to the base. The point where these lines meet marks the location for the pivot hole for the trammel attachment.

INSIDE RADIUS. Set the trammel attachment to rout an 8" radius on the inside edge of the assembly. Be sure to measure 8" from the pivot hole to the *outside* edge of the router bit. Then I routed the inside radius of the arch, moving in a clockwise direction, and taking several shallow passes, see Fig. 3.

OUTSIDE RADIUS. Next, reset the trammel attachment to rout a 10¼" radius on the outside edge of the frame. (This time measure 10¼" from the pivot point to the *inside* edge of the bit.)

Shop Note: In order for it to cut through the 1 1/16"-thick stock, I had to pull the 1" bit I was using out of the collet about ⅛". This won't cause any problems as long as the bit is not over-extended.

THE MIRROR BOTTOM

After the top arch was routed, I worked on the three-piece bottom assembly.

CUT PIECES. First, rip enough stock to form two 4"-wide corners (C), and the 2¼"-wide bottom (D). Both corner pieces are mitered to 45° so they're 10⅜" long from point to point.

Next, determine the final length for the bottom piece. To do this, measure the outside diameter of the top arch (which should be 20½"), then subtract 9" (for the two 4½"-radius pieces used on the corners), see Fig. 4. The result will be the length of the bottom piece (11½" in my case).

ASSEMBLY. Once these three pieces are cut, join them by cutting slots on the both ends of the mitered corner pieces and on the ends of the bottom piece. Then cut splines to fit the slots and glue the three pieces together, see Fig. 5.

TRIM MITERS. Next, true up the mitered ends that will be joined to the frame's long sides (B). To do this, first use a hand saw to remove the extra "ears" extending below

the bottom piece, see Fig. 5. Then use a table saw to trim the mitered ends (keeping the bottom piece tight against the fence) so the assembly is 4½" wide.

TEMPLATE. After the mitered ends are trimmed, they're cut into rounded corners on a band saw. To do this, cut out a template with an inside radius of 2¼" and an outside radius of 4½", see Fig. 6.

Then butt the bottom assembly against the top arch (as shown in Fig. 7), and position the template so, 1) the outside edge of the template lines up with the outside edge of the top arch, and 2) so the template is flush with the mitered edge that's butted against the top arch.

After the radius is traced on both corner pieces, cut out the round corners on a band saw. Then sand the edges smooth using a drum sander on a drill press.

THE SIDES. Next, the frame's long sides (B) are added. To determine the length of these sides, butt the bottom assembly against the top arch, and measure the combined height of both assemblies. Then subtract this measurement from the 53" height of the frame, see Fig. 1.

Cut both sides 2¼" wide, and to the final length. Then rout slots (for splines) on both ends of each piece, see Fig. 8. Finally, the entire mirror frame can be assembled and set aside to dry.

THE MOLDED EDGES

All four edges on the mirror frame are molded with a router in four separate cuts.

FIRST CUT. The first cut is made on the outside edge of the face side of the frame using a ⅜" rounding-over bit with a pilot. Set the depth of cut to produce a 3/32" shoulder (see Step 1 in Fig. 9), and rout the frame in a clockwise direction.

SECOND CUT. Then switch to a ¼" rounding-over bit with a pilot to rout (in a *counter-clockwise* direction) the inside edge of the frame, leaving a 3/32" shoulder, see Step 2 in Fig. 9.

THIRD CUT. The outside edge on the back side of the frame is also routed with a ¼" rounding-over bit (moving *clockwise*) — but this time there's no shoulder, see Step 3 in Fig. 9.

FOURTH CUT. The final cut is to rout a rabbet for the mirror itself. This cut is made using a ⅜" rabbet bit with a pilot (see Step 4), routing *counter-clockwise* with very light passes. This rabbet should be just slightly deeper than the groove for the spline, see Detail 5 in Fig. 9.

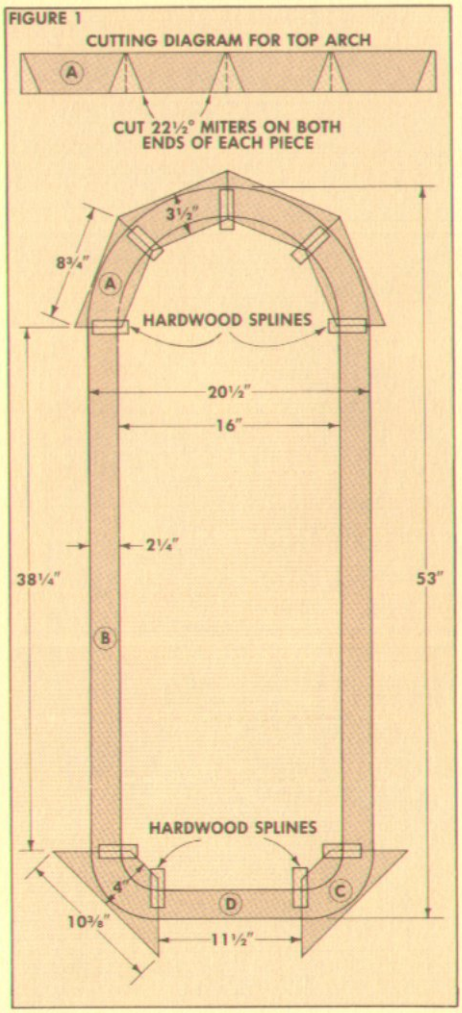

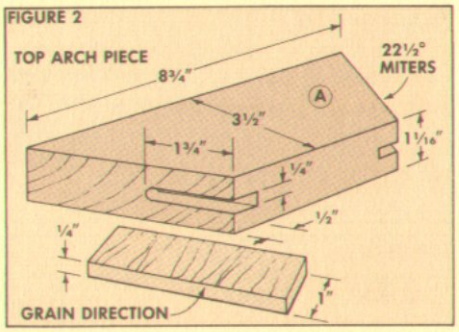

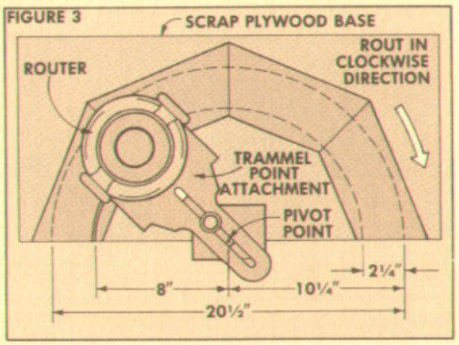

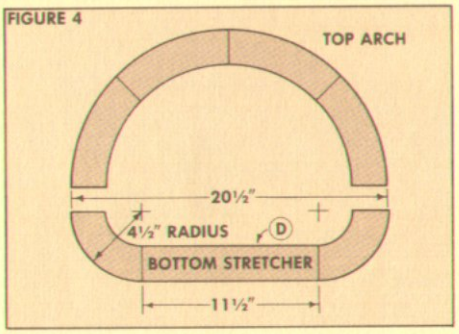

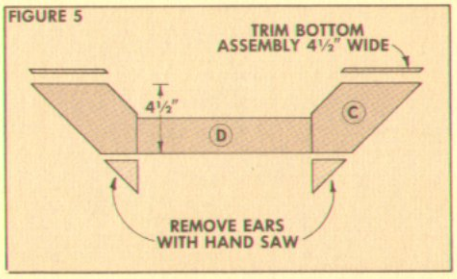

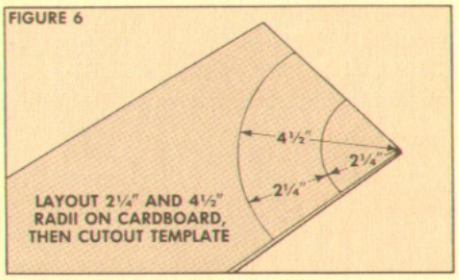

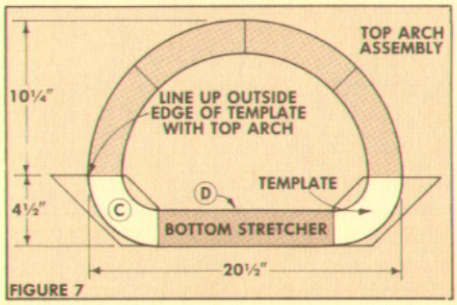

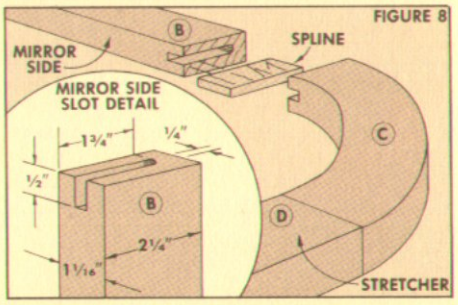

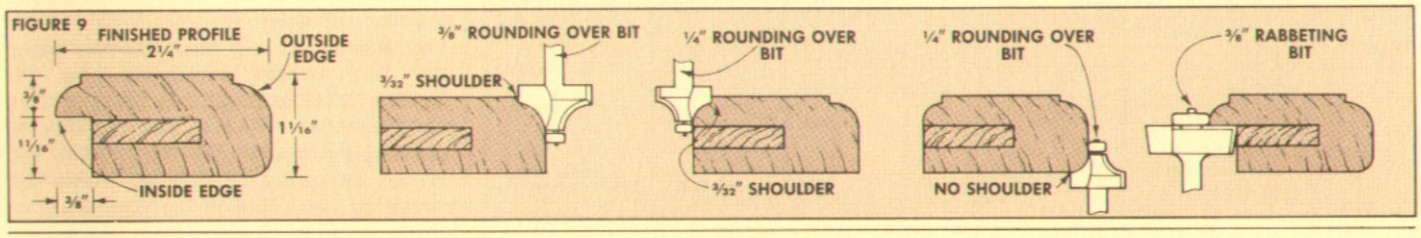

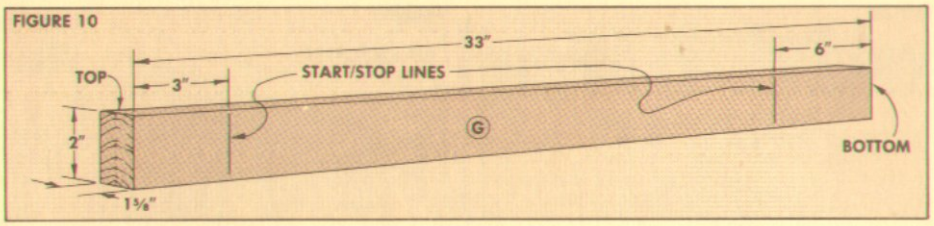

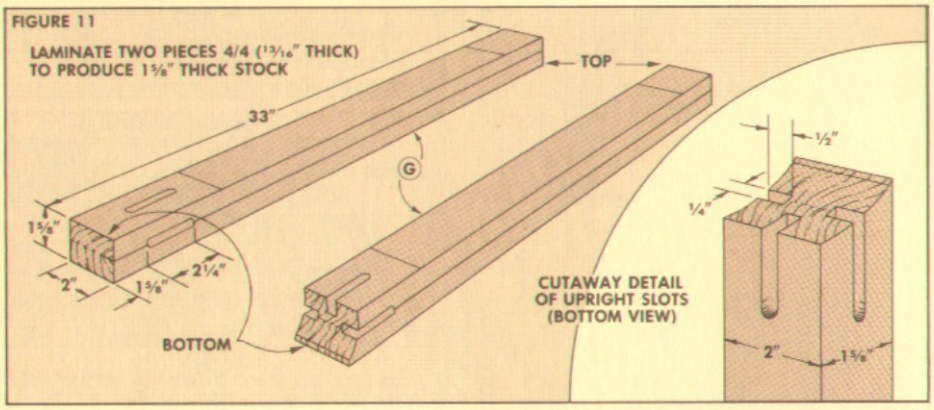

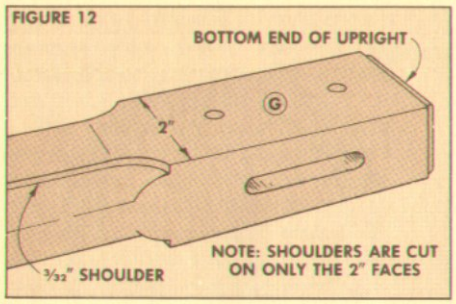

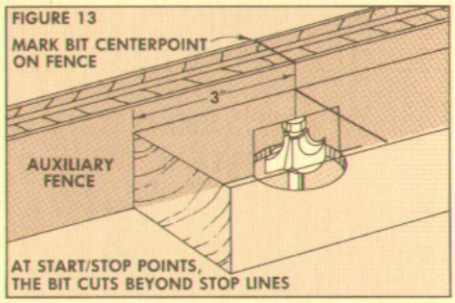

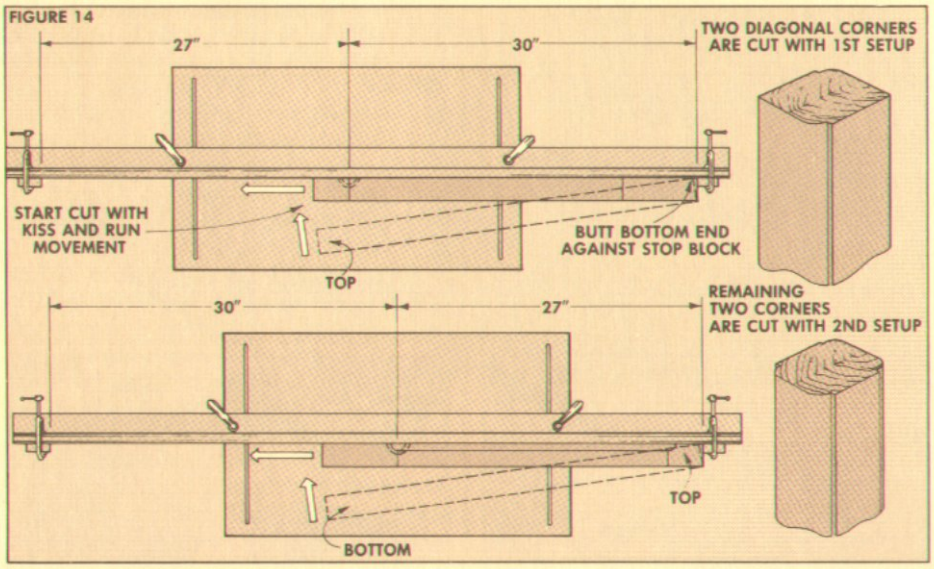

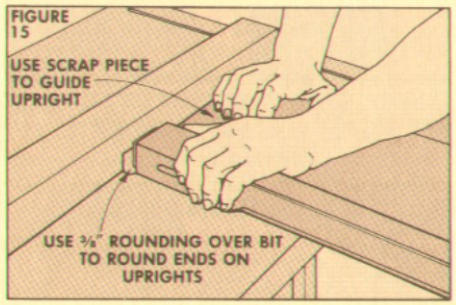

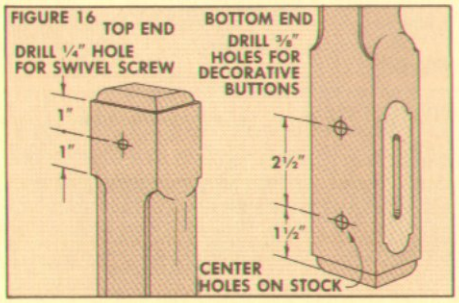

At this point, the mirror frame looked sharp enough by itself that I was tempted to just hang it on the wall. But it didn't take long before I ran into the "how high to hang it" problem, and decided (again) that the swivel stand was really a good idea.

THE UPRIGHTS

The first step in building the mirror stand is to laminate two pieces of 4/4 lumber (13/16" thick) to produce the 1⅝" thick stock needed for each upright. Then the laminated stock is cut to the final size for the uprights, see Fig. 10.

SLOT MORTISES. A double-slot mortise and spline joint is used to join both the center stretcher and the legs to the uprights. This joint is similar to a mortise and tenon, except slots (mortises) are cut in *both* pieces being joined, rather than in only one piece. Then the two halves are joined with a spline, which acts as a tenon.

Using the router jig shown on page 22, I routed two mortises (for attaching the legs) centered on the 1⅝"-wide faces of the uprights, see Fig. 11. Then I cut another mortise (for the stretcher) centered on the 2"-wide face.

MOLDING THE UPRIGHTS. After the mortises are cut, all four edges of the uprights are routed with a ⅜" rounding-over bit. These molding cuts stop 3" from the top end of the upright, and 6" from the bottom (mortised) end, and have a 3/32" shoulder on only the 2"-wide faces, see Fig. 12.

Making the uprights requires two different setups on the router table. The first step is to attach a long L-shaped auxiliary fence to the router table, see Fig. 13. Then stop blocks are clamped at both ends of the fence. One block is 27" to the left of the center of a ⅜" rounding over bit, and the other is 30" to the right of the bit, see Fig. 14.

With the stop blocks in these positions, the molding will stop 2⅜" from the top of the uprights, and 5⅜" from the bottom.

To rout the first edge, position the upright on the router table with the 2"-wide edge face down, and the bottom end of the upright against the stop on the right. Keep the top (left) end of the upright several inches away from the bit, and start the router. Then use a kiss and run movement so the router bit doesn't burn the wood. To do this, swing the top end of the upright into the bit, and immediately start sliding the upright toward the left stop. Next, rotate the upright so the opposite 2"-wide face is down on the router table, and rout this edge.

At this point, only two diagonal edges have been routed, see Detail, Fig. 14. Routing the remaining two edges requires reversing the position of the stop blocks, and flipping the upright end for end, see the second setup in Fig. 14. Rout the remaining two edges in the same manner

as the first two edges, again, keeping the 2"-wide face down on the router table.

ROUT ENDS. After the edges are routed, the top and bottom ends of the uprights are routed using a ⅜" rounding-over bit, see Fig. 15. To help keep the upright at 90° to the fence, I used a square piece of scrap stock to guide the upright through the bit.

DRILL HOLES. The key to making the frame swivel is a fancy piece of hardware called a "swivel mirror screw and insert." This is just an ornate thumb screw and threaded insert, see Sources on page 24.

In order to mount the screw, drill a ¼" hole on through the 2"-wide side of the uprights, see Fig. 16. While I was at it, I also drilled two ⅜" holes, ¼" deep at the bottom of the uprights for decorative buttons, refer to Fig. 16.

THE STRETCHER

A single stretcher is used to join the two uprights on the mirror stand. To determine the correct length of the stretcher, measure the outside width of the mirror frame, and add twice (for both sides) the thickness of the flange on the threaded insert.

The center stretcher is cut from 5/4 stock so it's 4" wide, and to the length figured above (this should be 20⅞"). Using the layout shown in Fig. 17, make a template and trace the curve at both ends of the stretcher, see Fig. 18. Then bandsaw the profile, and sand it smooth.

Again, rout ¼" x 2¼" slot mortises in the ends of the stretchers (see Fig. 19), and cut hardwood splines to fit. Then the top and bottom edges on the stretcher are routed using a ⅜" rounding over bit, producing a 3/32" shoulder, see Fig. 20.

ASSEMBLY. Finally, finish-sand the uprights and the stretcher. Then assemble these pieces so the bottom edge of the stretcher is ¾" from the bottom of both uprights, see Fig. 21.

THE LEGS

To help eliminate waste, and to prevent weak spots due to improper grain direction, the four curved legs of the mirror stand are cut at an angle on four 5"-wide by 20"-long pieces of 5/4 stock. Miter both ends on each piece at 45°, so they're 18" long from point to point, see Fig. 22.

Cutting all four legs to exactly the same shape requires using a template. To make the template, first copy the profile shown in Figure 22 onto a piece of cardboard. Then cut out the template and trace it on the leg blanks, see Fig. 22. Once the profile is transferred to the blanks, the legs are band sawn and sanded smooth.

Then clamp the legs together to check the consistency of the legs where the curves will meet the upright. These ends must be of equal size so the legs can be positioned correctly later.

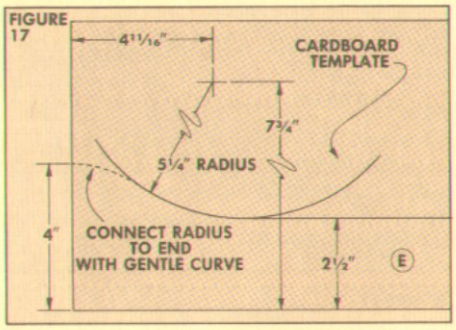

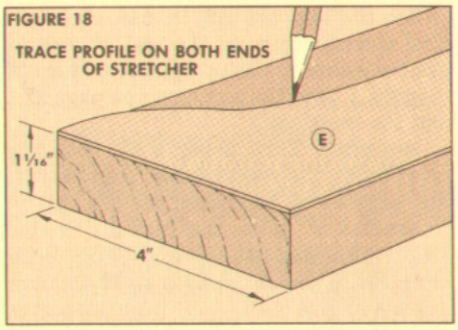

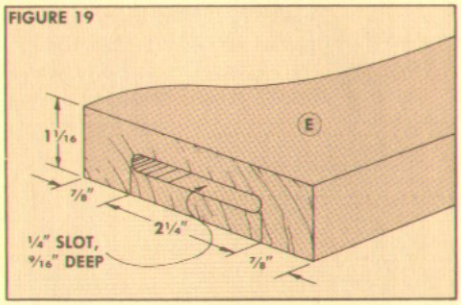

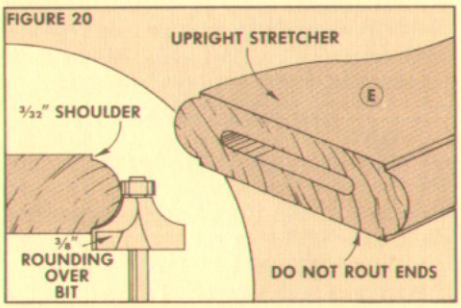

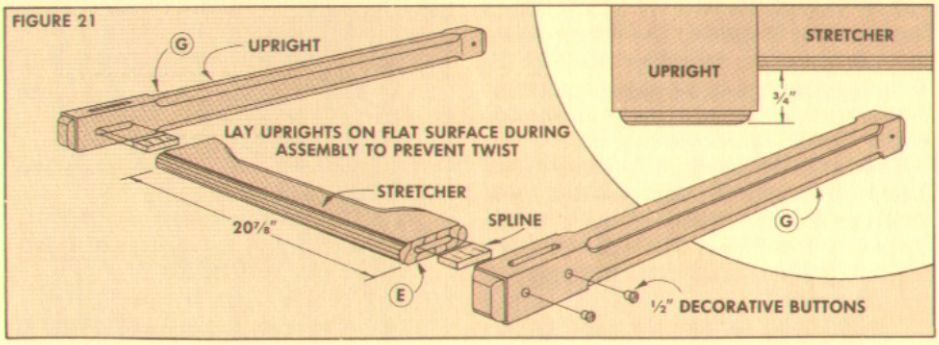

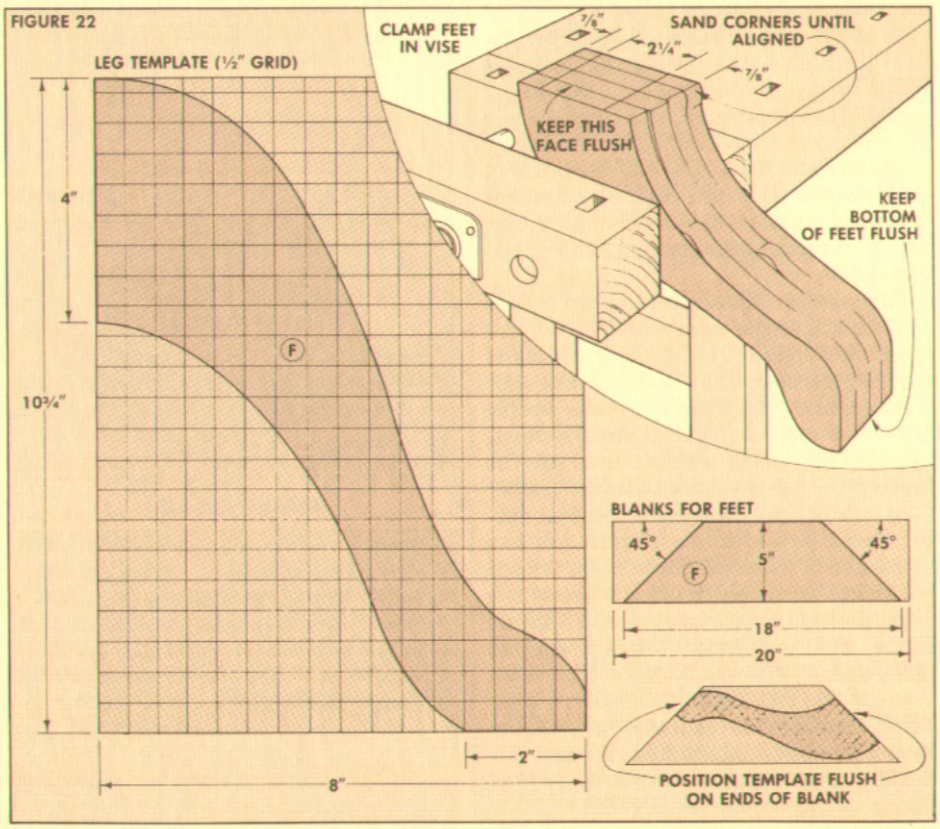

After the legs are cut to size, rout ¼" x 2¼" slot mortises on the end of each leg that attaches to the uprights, see Fig. 23. (Again, I used the router jig on page 22 to cut the mortises.)

MOLDING. Then using a ⅜" rounding-over bit on the router table, rout only the top edge on all four legs, see Fig. 23.

ASSEMBLY. After the legs are routed, they're finished sanded and glued to the uprights. Then cut splines to fit the mortises, and glue the legs ¾" from the bottom of the upright, see Fig. 24. You can use handscrews *and* pipe clamps (see Tips and Techniques, *Woodsmith* No. 29), or hand pressure to clamp the legs in position.

THE FINAL FITTING

At this point, both the mirror frame and the stand are basically complete. The only thing that needs to be done is to position the mirror frame on the stand and install the threaded inserts.

POSITION THE FRAME. To position the mirror frame, place a ¾" spacer block between the bottom of the mirror frame and the top of the stretcher, see Fig. 25. With the frame in this position, mark the location for the threaded insert on *one* side of the mirror frame, see Fig. 26.

To be sure the insert on the other side is located in exactly the same position, measure the distance from the mark to the bottom of the frame. Then use this distance to find the location for the insert on the other side.

The ⅜" holes for the threaded inserts are drilled ⅞" deep, centered on the flat spot on the outside edge of the frame (7/16" from the back edge), see Fig. 27. Note: As I was installing the inserts, I decided to coat the outside threads with epoxy to help prevent them from rotating in the hole.

THE MIRROR BACK. The 11/16"-deep rabbet that was routed on the back of the mirror frame provides room for a ⅛"-thick mirror, a ⅛"-thick Masonite back, and a flexible rubber stop.

To make the Masonite back, rip a piece of Masonite to the same width as the distance between the rabbets on the back of the mirror frame. Then lay the frame over the Masonite, and trace the inside profile of the top arch and both bottom corners, see Fig. 29. Using a sabre saw, cut the radii on the ⅛" Masonite to fit the frame.

At this point, I took the unfinished mirror frame to a local glass store and had them cut a ⅛"-thick mirror to fit the frame.

FINISH. To finish it off, I stained the frame and stand with two coats of Minwax Early American stain. Then I applied three coats of Minwax Antique Oil Finish.

MOUNTING THE MIRROR. Finally, I positioned the mirror in the frame, covered the back with the ⅛" Masonite, and tacked a flexible rubber stop in place to secure the mirror in the frame, see Fig. 30.

FIGURE 23

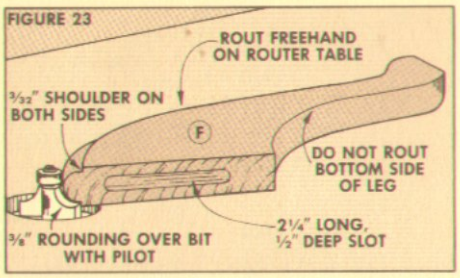

FIGURE 24

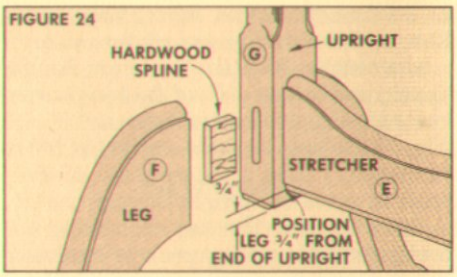

FIGURE 25

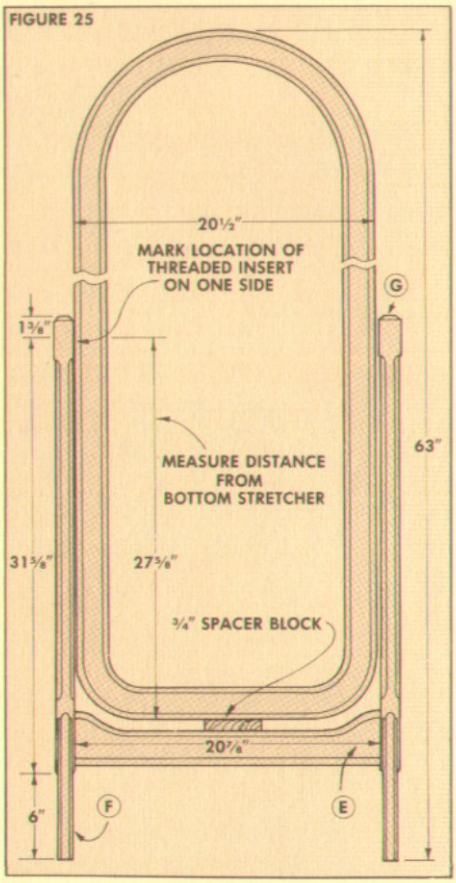

FIGURE 26

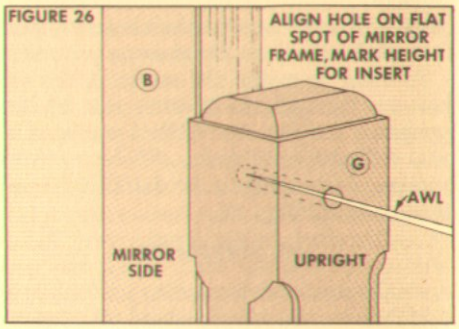

FIGURE 27

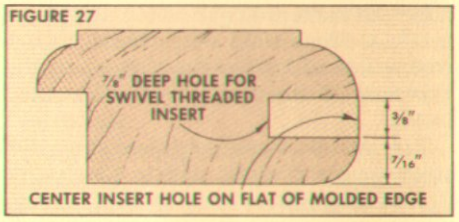

FIGURE 28

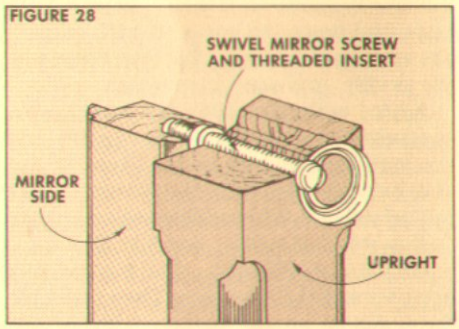

FIGURE 29

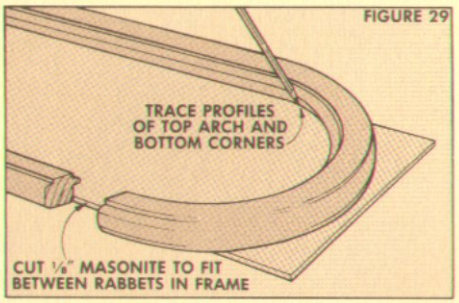

FIGURE 30

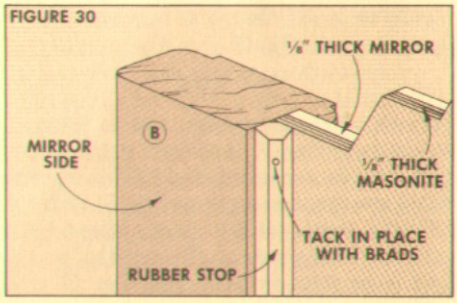

MATERIALS LIST

A Mirror Arch Pieces (4)	1 1/16 x 3½ - 8¾
B Mirror Side Pieces (2)	1 1/16 x 2¼ - 38¼
C Bottom Mitered Pieces (2)	1 1/16 x 4 - 10⅜
D Mirror Frame Stretcher (1)	1 1/16 x 2¼ - 11½
E Upright Stretcher (1)	1 1/16 x 4" - 20⅞
F Feet (4)	1 1/16 x 5 - 19
G Upright Blanks (4)	13/16 x 2 - 33

CUTTING DIAGRAM

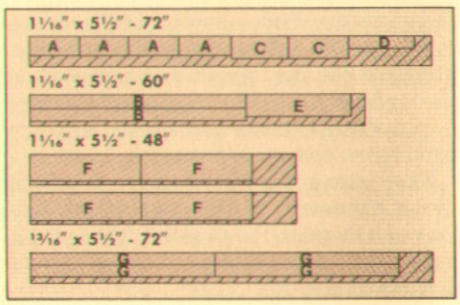

Shop Notes

As we were building the projects for this issue, I jotted down some notes concerning miter and spline joinery.

CUTTING MITERS

Although cutting miters seems like a simple operation, there's really more to it than just cutting the workpiece at the correct angle. In fact, even when the angle is set correctly, the cut can still be off. The problem is that the saw blade often tends to either pull or push the workpiece. This creeping makes it impossible to make a straight cut.

CREEPING. The easiest way to prevent the workpiece from creeping is to attach a plywood fence to the miter gauge to support the workpiece all the way to the blade. Then clamp a stop block to the fence so constant pressure can be applied to the workpiece to push it away from the blade, see Fig. 1.

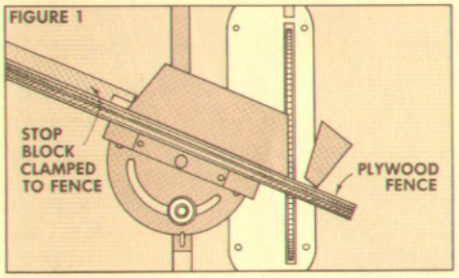

CUT MITERS. Now, to cut the mitered pieces, I use the following procedure: First I cut each of the pieces for the frame to rough length (usually ½" to 1" longer than needed).

Then I've found it's best to sneak up on the miter by making two cuts. The first cut clears away most of the waste. Next, a trim cut is made which just barely skims off the end of the miter. This cut should be gauged so no more than one-half the thickness of the saw blade actually makes the cut. This way there's much less chance of the blade pulling or pushing the workpiece out of line.

CUTTING GROOVES FOR SPLINES

After the miters are cut, the pieces are joined and also aligned with the use of splines. To keep the pieces aligned, these grooves must be either, 1) centered on each miter, or 2) they must be the same distance from the face side of each piece.

Back in *Woodsmith* No. 21, we showed how to cut these grooves on a router table. This method does a nice job of keeping the grooves the same distance from the face side of the mitered piece. However, one groove on each piece must be started with a plunge cut.

To get around this problem, I used the jig shown on page 22 in this issue to cut grooves that are exactly centered on each miter. This eliminates the problem of making a plunge cut, yet still provides perfect alignment for the splines.

CUTTING SPLINES

Of course, once the grooves are cut, the splines have to be cut to match. The key here is to cut the splines so they have a good friction fit in the groove.

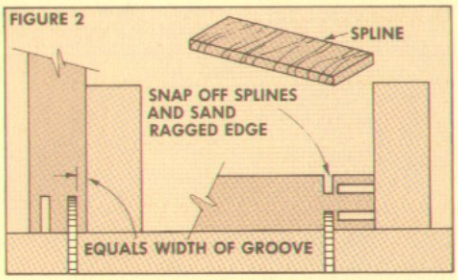

For greatest strength, the spline should be cut so the grain is running across the joint line, see Fig. 2. This requires two cuts. The first cut is made by setting the rip fence the "proper distance" from the blade. This distance is equal to the width of the groove in the mitered pieces.

For the second cut, set the rip fence about 1/32" *beyond* the bottom of the first cut, and guide the workpiece with the miter gauge to make two shallow cuts. Then simply snap off the splines and sand off the ragged edge.

GLUING UP MITERED FRAMES

If the spline fits well, the mitered pieces can be glued together *without clamping*. Hand-pressure alone will produce a good tight joint. This is because the strength of a spline joint is between the spline and the sides of the grooves — *not* between the two mitered edges.

If the spline fits tight in the groove, it will pick up moisture as glue is applied, swell, and produce a very tight joint.

Hold the joint together for a minute or so, and then set it down on a flat surface to dry. In a few minutes, it will be almost impossible to get the joint apart — even if you wanted to.

MAKING ADJUSTMENTS ON MITERED FRAMES

If you're building a frame with these mitered pieces, don't try to glue them all together at once. (They almost never fit together perfectly.)

Instead, glue pairs together to form two half-frames. Then the open ends of the frame halves can be trimmed so both halves fit together perfectly.

If you're working with a six-sided frame, the open ends can be trimmed on the table saw, see Fig. 3a. If the frame is eight-

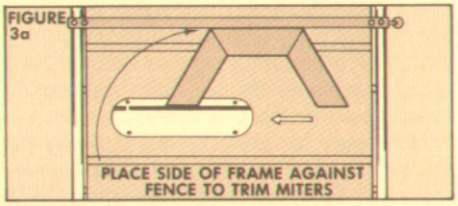

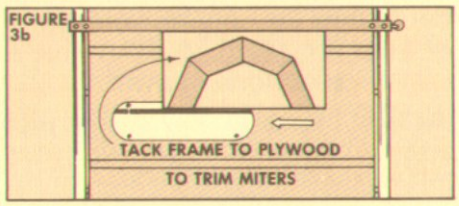

sided, it must be mounted to a piece of plywood first, see Fig. 3b.

ROUTING ROUND FRAMES

The secret behind cutting a round frame is simple: use a router with a trammel attachment. I use a Sears router and the Sears No. 25179 multi-purpose router guide and trammel attachment.

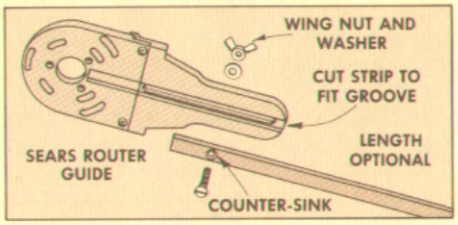

If the radius of the circle is large (as on the round table in this issue), an extension arm can be added, see Fig. 4.

SMOOTH RABBETS

When I was building the frame for the cheval mirror shown in this issue, I cut a rabbet on the back side of the frame with a router and rabbet bit. However, there's a problem with this type of routing.

One shoulder of the rabbet (where the bottom of the rabbet bit cuts) always chips out. Unfortunately, this is the shoulder that will be reflected in the mirror.

To prevent chip-out on this shoulder, set the rabbet bit to the final depth of the cut. Then make a *light* scoring pass, moving the router in a *counter-clockwise* rotation around the inside edge of the frame. This is actually the "wrong" direction, but it produces a smooth, clean shoulder.

Then to complete the rabbet, reset the depth of cut and make successively deeper cuts in the correct (*clockwise*) direction until the scoring cut is reached.

Round Clock Frame

ROUTING 'ROUND THE CLOCK

How do you make a round frame? This is one of the woodworking techniques that has always intrigued me. Although there are several ways to go about it, the method I used for this clock produces a sturdy, and quite handsome frame. One that should stand up to the test of time.

However, in order to build the round frame for this clock, it's best to first order the clock face and bezel (the glass dome that fits over the face), because they will affect the final size of the frame.

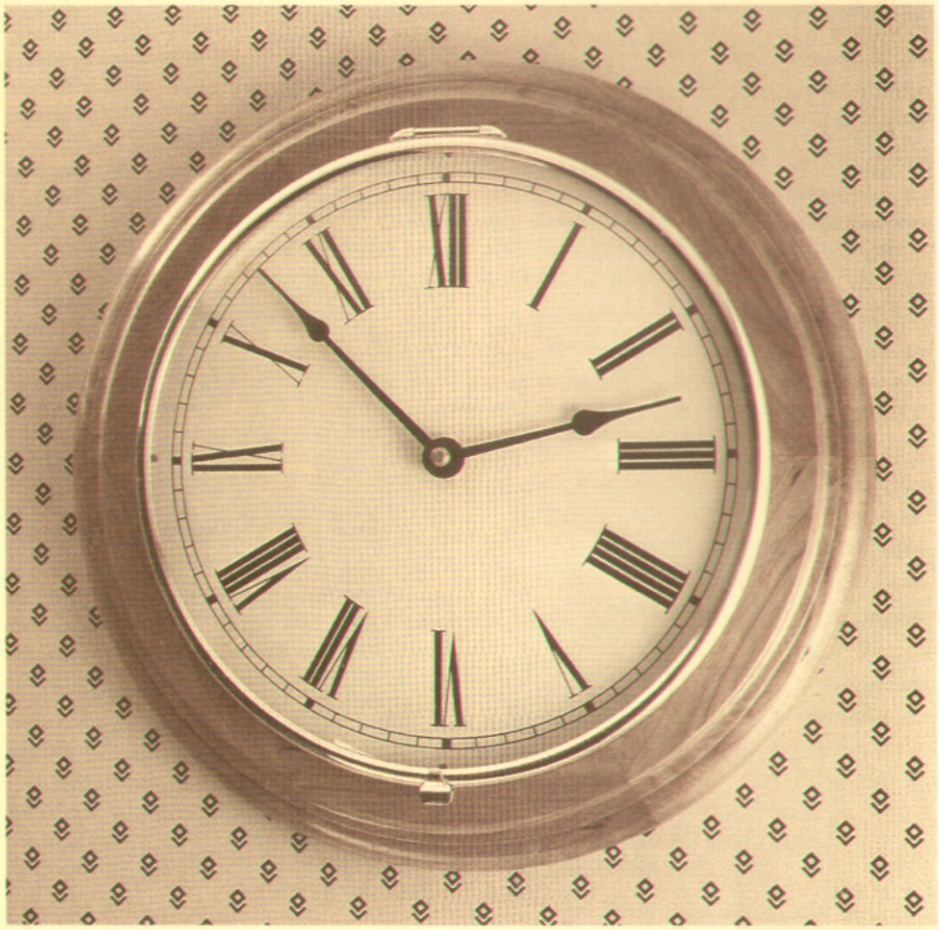

MAKING THE FRAME

The bezel I purchased (see Sources, page 24) has a diameter of 9⅞", so I built a frame with a diameter of 13" to provide a 1½" rim around the frame. This involves building a hexagonal (six-sided) frame first; then routing it (with the aid of a trammel attachment) into a circular shape.

RIP STOCK. To build the hexagonal frame, rip a 60"-long piece of 5/4 stock to a width of 3⅜". Then cut off six sections to a rough length of 9".

Shop Note: As I was cutting the rough lengths, I numbered each piece and indicated the grain direction so when the frame was assembled, the grain would run continuously around the frame. A nice touch.

CUT MITERS. To join the six sections together, I used miter and spline joinery. The details of making this joint are given on page 9. But it basically involves cutting 30° miters on both ends of all six pieces so their final length is 8" from point to point, see Fig. 1.

JOINERY. After the miters are cut, the next step is to cut grooves in each mitered end for the splines that hold the joint together. These ¼"-wide grooves are stopped so they don't show on the outside perimeter of the frame, see Fig. 1. (To cut stopped grooves, I used the router jig described on page 22.)

ASSEMBLY. After the grooves are cut, ¼"-thick hardwood splines are cut to fit the grooves. Then the frame can be assembled. I did this by gluing up two "half" sections consisting of three pieces each. Then I glued these two halves together to form the six-sided frame. (Shop Notes on page 9 describes how to join these halves to form a perfect frame.)

SETUP FOR TRAMMEL ATTACHMENT

After the frame is assembled, it's formed into its final circular shape using a router and trammel attachment. However, to hold the frame in place while routing, I first tacked it to a circular piece of ½" plywood (cut to a 6" radius), see Fig. 2. (Make sure the brads are placed where the router bit won't strike them.)

Then I nailed a piece of scrap 2x4 to the bottom of the plywood so the whole assembly can be held securely in a bench vise.

PIVOT POINT. In order to use the trammel attachment, the pivot point has to be at the same height as the frame. I glued and nailed a piece of 5/4 scrap to the plywood — approximately in the center of the frame, see Figs. 2, 3.

Then to locate the pivot point, place a straight edge across the three opposing joints and mark lines on the center block, see Fig. 3. The point where the three lines intersect is the pivot point for the trammel attachment. (The Sears trammel attachment I used requires a ⅛" pivot hole at this point.)

ROUTING THE FRAME

At last, the frame can be routed into a circular shape. Doing this involves three basic steps and five different routing cuts. (Note: In all cases, the routing is done by moving the router in a *counter-clockwise* direction.)

OUTSIDE CIRCUMFERENCE. The first step is to rout the outside circumference of the frame to a radius of 6½" (diameter of 13"). To do this, first mark a line 6½" from the pivot point and drill a ¼" pilot hole so it just touches the *outside* of the marked line, see Fig. 4. This pilot hole makes it easier to lower the router bit when routing the circumference.

Then use a ¼" carbide-tipped straight bit and the trammel attachment to rout through the frame in several (counter-clockwise) passes, see Fig. 5.

ROUT RABBET. The next step is to rout a rabbet on the inside of the frame. (This rabbet is for a ¼" plywood insert which will hold the quartz clock movement and the clock face.)

Re-set the trammel attachment so the outside edge of the router bit is 4½" from

the pivot point, see Fig. 6. Then rout a groove as deep as the actual thickness of the plywood you want to use for the insert. (Since the depth of this cut is shallow, there's no need for a pilot hole.)

After routing the groove, there will still be waste sections left on the inside edges of the frame. To remove these areas, use the router (without the trammel attachment) and a ½" straight bit. This will leave a wide shoulder (or rabbet) on the inside of the frame for the plywood insert, see Fig. 6.

MOLDING CUTS. The basic round frame is complete at this point. Now all it needs is a couple of molding cuts to dress it up.

I used a ½" corner-round bit with a pilot to form a corner-round profile with an 11/32" shoulder, see Fig. 7. Because a pilot is used with the router bit, this operation can be done freehand (without the trammel attachment). I made two successively deeper passes to form this molded edge.

CORE BOX BIT. Then I softened the square shoulder by switching back to the trammel attachment and used a ½" core box bit to rout a cove to a depth of ¼" (in two passes), see Fig. 7. When finished, there should be a ¼" cove with a 3/32" square shoulder remaining below the cove.

INSTALL BEZEL AND CLOCK FACE

After the frame is routed, the bezel, clock face, and clock movement can be installed.

PLYWOOD INSERT. To support the clock movement, I cut a ¼" plywood insert to fit the rabbet in the frame. (This circular insert can be made the same way as the frame: mount the plywood to the base used earlier and rout it with a trammel attachment.)

Next, drill a ⅜" hole in the center of the plywood for the stem of the clock movement. And finally, glue the plywood insert in the frame, using "C" clamps to keep it flush with the face of the frame.

BEZEL HARDWARE. For stability (and looks) I wanted to hinge the bezel at the top of the clock instead of the side. So I decided which part of the frame was going to be "12 o'clock high." Then I centered the bezel on the frame (with the hinge at 12 o'clock) and marked the location for the two hinge screw holes.

I also marked the position of the slightly larger hole for the catch at the 6 o'clock position, see Fig. 8. Drill these holes, and counterbore the backside of the frame for the fastening nuts.

FINISH. After the holes were drilled for the bezel, I finish-sanded the frame and applied one coat of Sutherland Welles polymerized tung oil sealer. Then I rubbed in five coats of high gloss polymerized tung oil.

INSTALL MOVEMENT. When the finish is dry, attach the clock face to the plywood insert, and install the bezel. And finally, mount the clock movement.

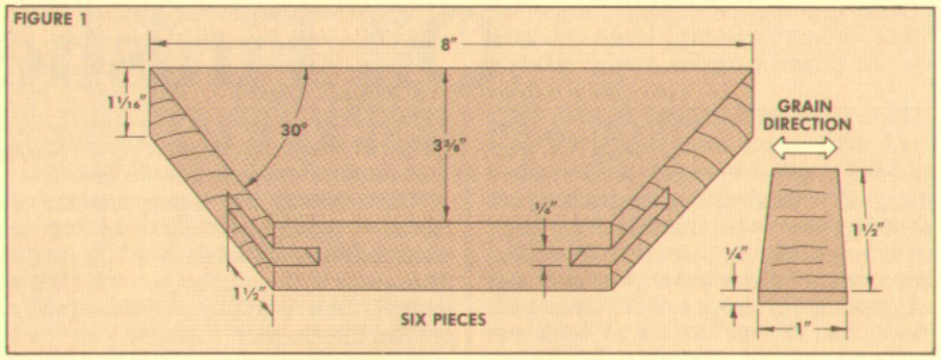

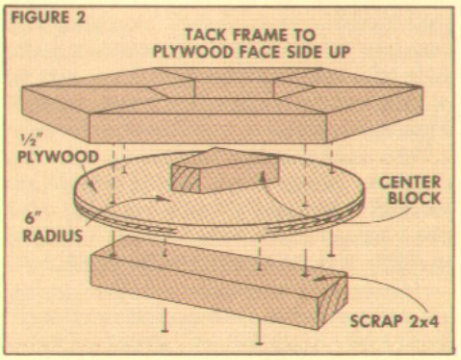

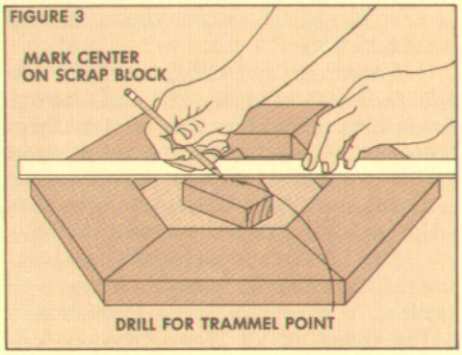

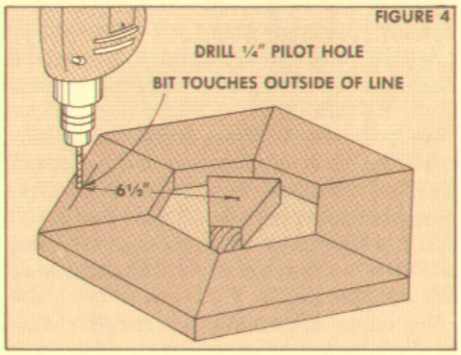

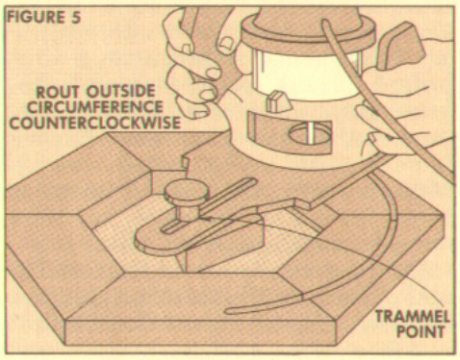

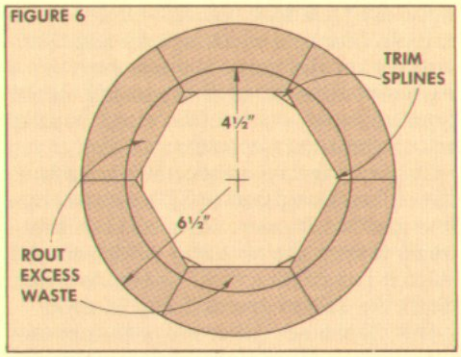

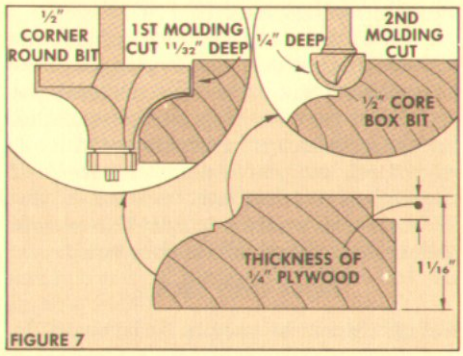

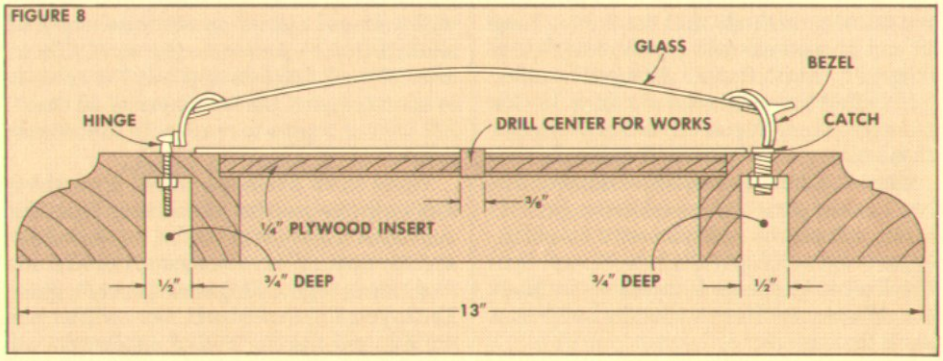

Oil Finishes

FINISHING ISN'T AS BAD AS YOU THOUGHT

Using oil to finish and protect wood isn't anything new — oil finishes have been around since the first woodworker spilled bear grease on the top of his table and watched the raindrops roll off. Even back then it was obvious that an oil finish was relatively easy to apply, provided some protection against water, and made the wood look better.

Over the years, wood finishers have created thousands of variations in an attempt to improve on the first crude oil finishes. Solvents such as turpentine or mineral spirits are added to give the oil better penetrating ability; driers are added to make the oil dry faster; resins and waxes are added for surface protection, and even the makeup of the oil has been changed by "cooking" it or combining it with other oils.

The result of all these changes and enhancements is a type of finish that has struck a responsive chord with modern-day woodworkers. Although the good ol' surface finishes (paint, varnishes, lacquers, polyurethanes) have their place, there's nothing quite like the feel of a piece of wood that's been finished with oil. Which is exactly the point. With an oil finish, you can feel the wood, and not a layer of something *over* the wood.

But, what exactly are oil finishes? The most common oil finishes in use today are linseed oil, tung oil, the so-called "Danish" oil finishes, and the relatively new oil and varnish combinations.

Each of these oils and oil combinations has advantages and disadvantages. Perhaps the biggest advantage (at least the one that's promoted by all the manufacturers) is the ease of application: Put it on, wipe it off, and you're done. But the best way to achieve the "hand rubbed, oil finish" everyone wants is to spend some time understanding how oil finishes work.

HOW THEY WORK

Not all oils can be used to finish wood. In fact, there are basically two kinds of oils: oils that dry, and oils that don't dry. Tung oil and linseed oil will dry or "cure" to a relatively hard finish. However, other types of oil (mineral oil and motor oil, for example) won't dry at all. It's all a matter of chemistry.

Since I don't know much about chemistry, I asked someone who does — Dr. Bill Feist, a research chemist with the U.S. Department of Agriculture's Forest Service Forest Products Laboratory in Madison, Wisconsin. Here's what he had to say about drying oils:

"The term 'drying' means that the oil reacts — usually with air — to form an essentially new material which is no longer dissolvable in the original solvent. This is basically how a drying oil differs from a product like lacquer or shellac.

"Lacquers or shellacs do not react chemically — they merely lose their solvent and the material is left behind in the form of a discrete film. That film can be redissolved by putting the same solvent right back on it.

"The best example of this is when an alcoholic drink is placed on a shellac-covered table and it spills and leaves a white ring. The alcohol in the drink is partially dissolving the shellac again.

"Linseed oil, tung oil or the other drying oils cannot be redissolved, in any way, with their original solvent after they have dried because they have changed their chemical composition. It's sort of like having a bowl of spaghetti dry out. Once it has done its curing bit, you just can't do anything with it."

PENETRATION. There is another difference between oil finishes and "surface" finishes. Most oil finishes are touted as being "penetrating" finishes. When an oil finish is applied to wood, it soaks in, dries, and becomes part of the wood, instead of sitting on top of it.

To some extent this is true. But the depth of penetration on the surface of the wood isn't all that much — only a few microns (a couple of cell layers) deep. Penetration on end grain is much greater — anywhere from ¼" to 2" depending on the type of wood — but that's not usually where you want or need protection.

To get better penetration on the surface, the oil can be rubbed in by hand, or with fine-grit sandpaper. This creates heat, which lowers the viscosity of the oil and helps it penetrate a little better. At least, that's the "elbow-grease" way to do it.

But, there are other ways to increase penetration. Most oil finishes are thinned with mineral spirits or other solvents to allow the oil to penetrate the wood. Then, after the oil finish is applied, the solvent evaporates, and the thin layer of oil that's left behind begins to react with the air and cures.

When an oil finish has cured, it provides some protection for the wood. But the degree of protection can be increased by adding varnish or other resins to the oil. And this is when all the confusion begins. The type of oil that's used, the additives in the oil, and the method of application all affect the amount of protection the finish provides.

PURE OIL FINISHES

Determining what an oil finish consists of, what it will do, and how to use it can get a little confusing. Basically, there are only two drying oils widely available on the market today: linseed oil and tung oil.

LINSEED OIL. Linseed oil (made from flax seed) is the granddaddy of oil finishes. In fact, if you look on the labels of many paints and varnishes, you'll still find linseed oil is one of the main ingredients.

Although raw linseed oil is available, usually what's sold today is boiled linseed oil. But the term "boiled" is something of a misnomer. You can't take raw linseed oil, boil it, and expect to have anything usable. It's really *refined* linseed oil.

No matter what you call it, boiled linseed oil does a good job of penetrating the wood, sealing it, and provides some protection against the elements.

When I was talking to Bill Feist, he referred to boiled linseed oil as "sort of a lovely finish even now. I think the modern finishes have gone more to the alkyds, modified linseed oils, tung oil, or mixtures of tung and linseed oils. But, when you talk to some of the purists, boiled linseed oil is still it."

For the record, many woodworkers are more than willing to give up this old standby. As one wood finisher told me, "linseed oil stinks to high heaven and it'll keep on stinking for about six months." Linseed oil also tends to turn woods a very dark, almost undesirable color. It also tends to give the wood a definite yellow tint.

TUNG OIL. In recent years, tung oil has attracted a lot of active supporters (and promoters) who prefer it to linseed oil. Pure tung oil, polymerized tung oil, tung oil varnishes, and tung oil/urethane finishes have become mighty popular products. But while there's renewed interest in it, tung oil is anything but new.

Tung oil has been around for thousands of years. Marco Polo is said to have brought tung oil back from his excursions to China. And the story is told that tung oil was used to seal the Great Wall of China (certainly a testament to its durability). Tung oil was also used as the base ingredient for the time-honored oriental lacquer finishes.

The word tung is Chinese for "heart" — the dark green leaves of the tung tree are heart-shaped. The tree itself is about the size of a magnolia tree, and produces a pod

about the size of a chestnut. That pod contains a cluster of smaller nuts from which the tung oil is squeezed.

Tung trees require very specific growing conditions (warm and moist). The trees flourish in parts of China, and for thousands of years were grown only there. Now, however, several countries in South America are supporting groves of tung trees for the commercial production of tung oil. For a while (from about 1904 to 1969) there was limited American production of tung oil, but Hurricane Camille wiped out the tung groves and American production was halted.

Most of the tung oil we use comes from South America. But before it hits the shelves, it's cleaned, refined, processed, and then, if nothing is added, it's labeled 100% pure tung oil.

When pure tung oil is poured from the can, it's thicker than you might expect. Most people thin it with mineral spirits to help its penetration, especially on the first coat. The effect of tung oil on wood is a low luster finish that's more resistant to water and heat than linseed oil.

POLYMERIZED TUNG OIL. Even better than pure tung oil (according to its fans) is polymerized tung oil. Here's another instance when a degree in chemistry would come in handy. Although it's easy to see and feel the oil as it's poured out of the can, what happens to it after it's applied is quite invisible — on the molecular level.

Bill Feist explains that when an oil dries, "it changes from one molecular weight to another. Everybody calls this curing, but the correct term is cross-linking — it's actually a chemical cross-linking.

"By heating the oil, this cross-linking process is partially completed. The oil goes from a state where it's a very low cross-linked material to one that becomes a little bit more resinous, a little easier to apply. Then after it's on, it doesn't have so far to go to cure."

Polymerization is another word for that chemical process. If a complete curing cycle involves, say, a dozen or more chemical cross-linking changes, polymerizing the tung oil may speed up five or six of those changes in advance.

To change pure tung oil into polymerized tung oil, it's heated to about 360 degrees, and oxygen is bubbled through it. The end result is a related, but new, product — polymerized tung oil — which dries faster and with a higher luster than pure tung oil. As with pure tung oil, polymerized tung oil can be used "straight" or mixed with various varnishes.

DANISH OIL FINISHES

Tung oil and linseed oil both are used to create a second category of oil finishes — the so-called "Danish" oils and oil/varnish mixtures.

The "Danish" part of the name relates to the natural oil finish that was applied to Danish Modern furniture during the 1950s. Part of the "look" of Danish Modern furniture was the hand-rubbed oil finish (not a surface finish such as varnish or lacquer).

Although Danish Modern furniture isn't as popular as it once was, there is no denying that the "Danish" oil finishes are at the height of their popularity. With good reason.

They're easy to apply, almost foolproof, they show off the natural beauty of the wood, and they add a measure of protection beyond that of a pure oil finish. One other advantage to the "Danish" oils (and, for that matter, all oil finishes) is the ability to repair the finish simply by adding more oil to a scuffed area or minor scratch.

Eric Dennis, the Marketing Director for the Watco-Dennis Corporation, says his firm "came out with Watco Danish Oil back in 1957; it's based on a formula that came from England. We called the product 'Danish' oil, but it's strictly a generic term. There's no standard for 'Danish' oil."

COMPONENTS. The "Danish" oils and oil/varnish mixtures have three basic components: the oil (obviously), solvents or thinners, and resins. They also may contain drying agents, and sometimes a pigment to add color to the wood.

In general, the addition of resins and solvents to the oil is what makes it a "Danish" oil finish. Adding resins to oil is fairly common practice. And resins come in many forms. Bill Feist says, "There are literally hundreds of possible resins to choose from, and from those hundreds, of course, there are millions of possible combinations because many finishes may have three or four different resins in them."

RESINS. But what are resins? Resins occur everywhere — especially in the plant world. The sap in a tree, for example, is a form of resin. And there are synthetic resins made by chemical reaction or polymerization. (Urethane and polyurethane are examples of synthetic resins. There's really no difference between urethane and polyurethane — the words can be used interchangably.)

"Danish" oil finishes, whatever their brand name, are simply one of those infinite combinations of oils and resins. They are penetrating oil finishes to which enough resins (in most cases, varnish or urethane) have been added to give the finished piece of wood some surface protection.

WHICH TO CHOOSE

When you set out to choose an oil or oil/varnish finish, there's no way to say that one is better than another. There are times when you may want just a light protective coat on the wood. In this case, a pure oil or one of the "Danish" oil finishes would be the "right" choice. Or, you may want a relatively heavy protective coat — which probably means choosing one of the oil/varnish mixtures.

It's really a matter of personal preference, and a little guess-work. When I set out to finish a project, the reason I choose one product over another depends on the look I want the wood to have, how familiar I am with the product, and (to be real honest about it) how the spirit moves me at the moment. Even then, I may alter the method of application and the number of coats to affect the outcome of a particular type or brand of finish.

In fact, I often apply a finish in ways the manufacturers specifically recommend against. But I like the results. Even the manufacturers tell me they're sometimes surprised at the results their customers get with their products using procedures and techniques they hadn't thought of.

While there is no single answer to the question "Which finish should I use?", in the process of trying to answer this question, I ask myself (and with any luck, answer) a number of questions about the project I'm getting ready to finish: What do I want the wood to look like when I'm done? How do I want it to feel? Will the project be exposed to moisture (spilled water, coffee, alcohol)? Will it be subjected to rough wear and tear that may need frequent touching-up? Do I want the wood to have a "natural" look, or have a little sheen?

Essentially, the finish I select is determined by my answers to those questions and past experience. Here's what I think about some of the oil finishes I've used and what kind of finish I expect from them.

Linseed Oil. I don't use boiled linseed oil as a final finish very often because it never seems to dry completely — it always remains just a little "soft." I have used it (in combination with pumice or rottenstone) to rub out varnished table tops. And Bill Feist mentioned that he used it to refurbish the old varnish finish on his son's 55-year-old string bass. (He mixes ⅓ boiled linseed oil with ⅔ mineral spirits, and a touch of alcohol to soften the old finish a little).

In general, I tend to avoid boiled linseed oil because it dries very slowly and it has too much odor . . . and, I think there are better products on the market.

Pure Tung Oil. I've switched to tung oil when I want to use a pure oil finish. The only problem here is knowing exactly what you're buying. Some of the tung oil finishes sold today are thinned down. So, in effect, you're getting less oil.

This isn't necessarily bad. (In fact, thinning the oil can help the oil penetrate the wood better.) But, it does help to know (at least from a price-comparison standpoint) if there's only tung oil in the can, or if some

thinners have been added. Hope's 100% Pure Tung Oil (the one we use most often) is pure (not thinned) tung oil.

Pure tung oil is easy to apply by rubbing it on with your hand or with a cloth. Although it can be applied straight from the can, most of the time, I thin it down with mineral spirits (especially for the first coat) to help it penetrate into the wood better.

One or two coats of pure tung oil will dry to a soft luster that's as close to a "natural" finish as you can get. By adding more coats, you can get more of a "hand-rubbed" look, or even develop a sheen that looks like a matte varnish finish.

Polymerized Tung Oil. I've only used polymerized tung oil a couple of times. But when I did, I was pleased with the results. It can be applied by brush, cloth or hand rubbing. And, the resulting finish is classy.

If one or two coats of polymerized tung oil are applied, it's not much different than pure tung oil. But as the coats are built up, it begins to take on more and more of a sheen. In fact, it can begin to look like a soft lustre varnish or lacquer.

The only brand of polymerized tung oil I've used is Sutherland Welles, which sells several different versions. Each version has an increased percentage of tung oil to solvents.

When I talked to Frank Welles about the difference between these versions, he said that it just makes it easier to get the amount of tung oil you want. If you want to apply a sealer coat of thinned-down oil, you can use his "sealer" version instead of thinning it down yourself. For additional coats, you can switch to low lustre, medium lustre or high lustre (the higher the luster, the greater the the percentage of polymerized tung oil).

One nice thing about the Sutherland Welles products is that the percentage of oil is listed on the label along with clear, concise, and complete instructions for its use and application.

OIL-VARNISH MIXTURES

If I want more protection than the pure oil finishes provide, I switch to one of the oil-varnish mixtures.

Watco Danish Oil. Watco oil is the finish I use a lot when I want the wood to have a very natural look. This "Danish" oil is a mixture of linseed oil and solvents, to which a small amount of resins have been added.

The amount of resins in Watco oil is apparently less than in some other "Danish" oil finishes, and that accounts for its "natural oil" appearance. Which is a nice way of saying that it looks "dried out" after a few months. This is why Watco recommends maintaining the look of the finish by reapplying the product periodically, or by applying a special "Satin Oil," or "Satin Wax" to restore the finish. There are also versions of Watco Danish Oil finishes that have pigment added to color the wood.

Minwax Antique Oil. Another product I like to use is Minwax Antique Oil. This also has a linseed oil base and has a higher percentage of resins than Watco. Since there are more resins in it, the Minwax oil tends to give a little more sheen to the wood — a sheen that seems to last longer than when Watco is used, but that also looks like something is "on" the wood.

Hope's Tung Oil Varnish. This is a combination of tung oil and varnish. The amount of varnish in Hope's product is noticeably higher than Watco or Minwax. In fact, I use it more as a thinned-down varnish than an oil finish — but one that's a whole lot easier to apply.

One or two coats of Hope's Tung Oil Varnish gives the wood a low gloss. An even greater sheen can be achieved by applying additional coats. Then the finish can be buffed with steel wool to a matte appearance.

Danish Oils With Urethane. Ever since "Danish" oil became popular, there has been a rash of new products with new combinations of resins. Deft, Sutherland Welles, Behlens, and even Homer Formsby are all producing "oil finishes" (either tung or linseed) with urethane resins. My experience with them is limited, but I think they will be good finishes for any surface that needs a little more protection than normal (such as a table top).

FINISHING TECHNIQUES

Once I choose the oil finish, the only other problem is how to apply it. Although this may sound dumb, I think the best approach to using oil finishes is to follow the instructions on the can. After trying whatever technique is suggested, then I start experimenting.

However, there is sort of a universal approach to applying an oil finish that works well for me.

Prepare the wood. The first step is to smooth the wood. On large flat surfaces, I use a scraper blade or plane to smooth the wood because these tools leave the pores open to accept the oil. On smaller surfaces, I use progressive grits of sandpaper.

Without going into a lot of detail about this necessary chore, I usually start with a 100-grit sandpaper and an orbital sander, and remove all the saw marks, planer marks, and burn marks.

Once the obvious marks and scratches are gone, I switch to 150-grit sandpaper and a hand sanding block, and finally go over the surface with 220-grit.

Apply thin coats. After dusting off the project with a tack cloth, I apply the oil finish. All oil finishes are designed to be applied in *thin* coats. This does *not* mean to apply the finish sparingly. In fact, it means just the opposite.

When applying the first coat of an oil finish, start by flooding the surface. Then, if I'm using one of the pure oil finishes or the light "Danish" oil finishes, I rub the finish in with a rag. (On small projects, it's nice to rub it in by hand. It's also kind of messy, but you get more of a feel for what you're doing.) When I'm applying one of the oil/varnish mixtures I usually use one of those polyfoam brushes to spread a slightly heavier coat.

No matter what kind of oil finish is used, I always keep the surface of the wood wet for whatever length of time the manufacturer recommends. (This is usually from 10 minutes to one hour.)

All of this talk about flooding the surface and keeping it wet may not sound like I'm applying a thin coat, but the next step takes care of that.

Wipe it off. After the finish has had time to soak into the wood, wipe it off. John Moser of Wood Finishing Supply Company says, "wipe it off 'tight' so there's no excess left at all. That's a term used in staining. I apprenticed with a gentleman who was a stainer for 50 years and that's a phrase he always used. 'Wipe it off tight' meant wipe it off clean; wipe it off completely."

John's advice is good. Initially, you want to flood the surface of the wood and keep it wet to give the oil a chance to soak into the wood. After the wood has absorbed as much of the finish as it can, the excess should be wiped off "tight." This is what produces the "hand-rubbed" look. If the oil is not rubbed off, the excess left on the surface will dry to a sticky mess.

Shop Note: All of this wiping on and wiping off requires a lot of clean rags. I've long since exhausted my supply of old T-shirts, so I finally had to break down and actually buy some rags.

I looked in the Yellow Pages under "Rags" and found a company whose sole business is selling clean rags. The rags they were selling are really remnants of the same material used to make T-shirts in the first place. I was able to get 15 lbs. (a life-time supply) of rags for $21.

Let it dry. After the excess oil is wiped off, give the soaked-in oil a chance to dry. The length of time the finish needs to dry will depend on the type of oil it is and weather conditions.

I usually wait 24 hours before applying the second coat. But if the humidity is high, or the temperature is low, or there's no air circulating, you might want to wait 48 hours before applying another coat.

Watch for bleedback. During the time the finish is drying, keep an eye out for excess oil which may seep to the surface. This irritating process is called bleedback (more about this later) and it always seems to happen when I use an oil/solvent mix-

ture or "Danish" oil finish on open-pored woods (like oak and ash), but it can occur on closed-grain woods as well (cherry, maple, etc.)

If bleedback occurs, keep wiping the excess oil away until it stops seeping to the surface. After one or two applications of finish, the pores in the wood will be sealed and bleedback won't occur anymore.

Second coat. After the first coat has dried, the second and succeeding coats of finish can be applied to achieve the look you want. Each additional coat should be applied in the same manner as the first — flood the surface, then wipe it "tight."

It's usually not necessary to sand or use steel wool between coats, but again, check the manufacturer's instructions.

The key thing to keep in mind with oil finishes is that you are applying very thin coats. Most of the first coat will soak into the wood. The second coat will start to leave a noticeable coat on the surface. With succeeding coats, you really start to see the effect of an oil finish on the wood. In other words, be patient — don't stop too soon.

SOME RULES TO BREAK

Although the procedure described above is the one I usually use, there are some variations on this theme . . . the kinds of things that usually are not recommended.

One variation is to apply the oil finish with sandpaper instead of rubbing or brushing it on the surface. Any of the pure oils or the "Danish" oils can be sanded into the surface on initial application with Wet-Or-Dry sandpaper. (I usually use 320 or 400 grit.)

This procedure accomplishes two things: First, it creates friction which results in heat. The heat helps the oil penetrate into the wood better than if it's simply rubbed in or brushed on.

Second, the sandpaper creates a fine sawdust which mixes with the oil and/or oil-varnish to produce a sort of goop. This goop acts almost like a paste filler and fills the pores of the wood.

When the first coat of goop is dry, a very light sanding with 400-grit sandpaper will remove any roughness. The second and succeeding coats can be applied in the normal way (without sanding during application.)

The final finish achieved with this method is similar to what you'd expect from filling the wood with a paste filler — and it's much easier. The result is a very smooth, yet natural surface.

OIL/VARNISH MIXTURES. When I'm finishing a project that needs a little more protection, or that might look better with a more glossy finish, I like to use Hope's Tung Oil Varnish and a slightly different procedure to build up a thicker-than-normal coat.

Essentially, I take advantage of the fact that this product is really a thinned-down varnish. First, I apply a coat of Hope's Tung Oil Varnish in the normal way (flood the surface, then wipe it tight). For the second and succeeding coats, I use a poly-foam brush to spread the oil-varnish evenly over the surface. Then, instead of wiping it off, I allow each of the coats to dry without wiping them off.

The result is a finish that looks like it has a coat of varnish on it (and, of course it does) but most of the problems usually associated with finishing with varnish are eliminated.

Since the Hope's product has more oil and solvents than "normal" varnish, each coat leaves only a thin coat of varnish. Thus, the drying time is reduced, and the problem of contamination by dust is reduced. Also, drips and runs are easier to control (particularly on molded edges), and brush marks "flow out" easier. In short, it's a whole lot easier to apply three or four thin coats of an oil-varnish, than two heavy coats of regular varnish.

BLEEDBACK

Although there are a lot of advantages to using oil finishes, one of the biggest problems is something that's called bleedback. This problem always seems to crop up when I'm finishing with a thinned-down oil finish or one of the "Danish" oil finishes — particularly on oak.

When bleedback occurs, it leaves spots of oil or varnish over the surface of the wood. But it doesn't always happen right away. In fact, I usually don't discover the appearance of those spots until an hour or two after the first application — when the finish has dried.

No matter how well I wipe the wood, these spots keep appearing. I've tried to find an answer, or at least a reason for this annoying problem. I've probably asked 100 people why bleedback occurs, and I've received about 200 answers. Some of the possibilities: bleedback only occurs on oak grown in certain parts of the country; the tanins in the oak react with the chemicals in the finish; moisture in the pores of the wood pushes the finish back out; dirt or dust in the pores keeps the finish out; trapped air escapes from the pores and pushes the finish out ahead of it.

The answer which I think is the most plausible is that as the solvent in the oil finish evaporates and escapes from the very large pores of the wood (called vessels in oak), it "eats" through the surface film (from underneath) which has already started to dry. After the solvent has escaped, the surface film has hardened too much to flow back over the openings and thus there are little eruptions that form concentrated spots of oil or varnish.

Unfortunately, there's nothing much you can do to *prevent* bleedback unless the wood is filled with a paste filler. (But that kind of defeats the purpose of using an oil finish in the first place.)

The best thing to do is keep watching for bleedback to happen, and keep wiping the surface when you see little blobs of finish. If you miss any and find yourself with a hardened, pimpled surface, simply let it dry and then use fine steel wook to buff it out.

If bleedback occurs while you're applying a pigmented oil-based finish, the problems are different. If there are pigments in the finish when it bleeds back, they can result in a discolored fly-specked appearance. In short, disaster.

Again, all you can do is keep watching for it to happen after you've wiped down the first coat. And then keep wiping the surface dry. In other words, don't apply a pigmented oil finish (or an oil stain for that matter) just before you retire for the night. If bleedback occurs overnight, you're in trouble. Wait until you can apply the stain during a time when you'll be able to watch it carefully.

WHERE TO GET HELP

All of the people we talked to are nice folks. Not only were they helpful to me, they promised to help any *Woodsmith* readers if you want some advice about how to use their products. Here's where to write or call:

The Hope Company, 100 Weldon Parkway, Maryland Heights, MO 63043. Telephone: (314) 432-5697.

Sutherland Welles, Ltd., 403 Weaver Street, Carboro, NC 27510. Telephone: (919) 967-1972

Watco-Dennis Corporation, 1756 22nd Street, Santa Monica, CA 90404. Telephone: (213) 870-4781.

Deft, Inc., 17451 Bon Karman Avenue, Irvine, CA 92714. Telephone: (714) 474-0400.

Minwax Company, Inc., 102 Chestnut Ridge Plaza, Montvale, NJ 07645. Telephone: (1-800) 526-0495.

Wood Finishing Supply Co. (Behlens Products), 1267 Mary Drive, Macedon, NY 14502. Telephone: (315) 986-4517.

SPECIAL THANKS

We talked to a lot of people to get the information for this article. Special thanks to Dr. Bill Feist of the Forest Service Forest Products Laboratory; Hope Finnegan, The Hope Company; Frank Welles, Sutherland Welles, Ltd.; Eric Dennis, Watco-Dennis Corporation; Robert Floriani and Herb Croxton, Deft, Inc.; Robert Aunann, Minwax Company; John Ebels, Behlens; and John Moser, Wood Finishing Supply Company.

As they say on television, without their help this story couldn't have been written.

Round Dining Table

CONTEMPORARY DINING FOR FOUR (OR SIX)

For some unknown reason, I'm attracted to round tables. They seem inviting and comfortable. When I finally got around to building this table, I decided to also make it practical by incorporating a sliding system so a leaf could be added to provide seating for six people.

I have to admit that this was not the easiest project I've ever built. The round top is a study in patience and care. It has a 46"-diameter solid-wood border with a veneered insert in the center.

THE BORDER FRAME

The outside border of table top starts out as a giant octagonal (eight-sided) frame. (I used Honduras Mahogany.) To get the thickness I wanted for the border, I rough-cut 16 pieces of 4/4 stock 5" wide by 21" long, and laminated (glued and clamped) pairs together to form the eight sides for the frame, see Fig. 1.

When the glue is dry, trim the eight pieces to a final width of 4¾". Then cut 22½° miters on both ends of each piece so the final length is 19½" from long point to long point.

GROOVES. The eight pieces are joined by cutting through grooves on each mitered end and then cutting splines to fit the grooves.

To cut the grooves, I used a router table and a ½" straight bit, see Fig. 2. Adjust the fence on the router table so the bit cuts a groove centered on the thickness of the stock. Then mark the face (top) side of each piece and keep this side against the router fence. (This will ensure that the top sides of all pieces will be flush when the splines are inserted.)

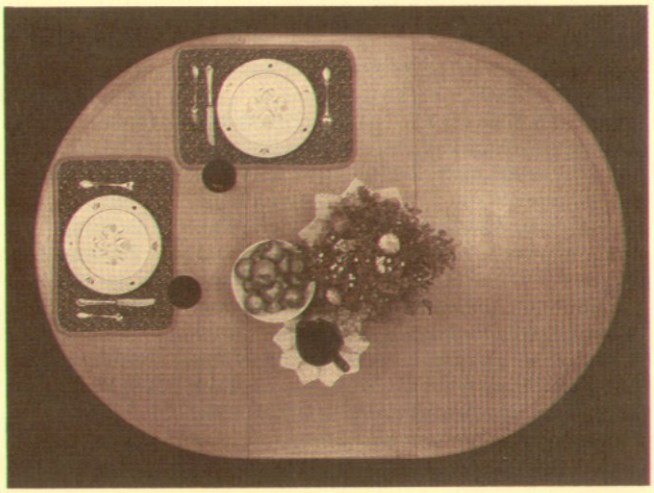

SPLINES. Next, eight splines are cut to fit the grooves. I made these splines long enough (5½") to stick out of both ends of the grooves.

ASSEMBLY. Trying to join all eight pieces at one time (while making sure all the joint lines meet perfectly) can be a nightmare. Instead, I glued pairs together, and then glued these assemblies to form two halves of the frame. Lay these assemblies on a flat surface while the glue sets up and dries.

Then to make sure the two half-frames fit together, I trimmed the open (mitered) ends so they formed a straight line, see Fig. 3. To do this, tack each half-frame to a piece of plywood so the open (mitered) ends just barely hang over the edge, and run them through the saw to trim the ends.

Finally, glue the two halves together to form the eight-sided frame. (I used a web clamp to pull the two halves together.)

ROUTING THE FRAME

This frame can now be routed into its final (circular) shape with a trammel attachment and router.

PIVOT POINT. To provide for the pivot point for the trammel attachment, I cut a stretcher (with pointed ends) to fit tight between two opposing joints of the frame, see Fig. 4. Note: The excess length of the splines (on the *inside* of the frame) must be pared off with a chisel. I went ahead and did this on all eight joints.

To find the pivot point, slide the frame over the ends of the stretcher. Then place a straight edge on opposing joint lines and mark lines on the stretcher. Where these lines intersect is the center of the frame (the pivot point).

Later in this process, you'll need to have pivot points on both the top and bottom sides of the stretcher. So, drill a small hole straight down through the stretcher to mark both sides.

EXTENSION ARM. In order to rout a circle this large, I had to add an extension arm to the trammel attachment (see Shop Notes, page 9). After this arm is mounted to the trammel attachment, drill a hole in the other end of the arm and screw it at the

pivot point on the stretcher, see Fig. 5.

PILOT HOLE. Before routing the outside edge of the frame, I drilled a pilot hole so the router bit could be lowered to make successively deeper passes. The *inside edge* of this hole is 23″ from the center of the pivot point, see Fig. 4.

OUTSIDE CIRCUMFERENCE. To rout the outside circumference, I used a ¼″ straight bit set to a depth of ¼″ for the initial pass. Adjust the trammel attachment so the bit is in the pilot hole, and rout the perimeter of the frame.

After the first pass is made, lower the bit in the pilot hole and make successively deeper passes until you're about half-way through the thickness of the frame. Then flip over this entire assembly (the frame and the stretcher), and rout the other side until the outside waste breaks free.

INSIDE RABBET. Next, the inside edge of the frame is routed to form a rabbet to hold the table top's circular insert.

To make this rabbet, the first step is to rout a groove around the inside edge of the frame. This groove should be about 1/32″ deeper than the thickness of the insert.

Shop Note: The reason for this extra depth is to keep the surface of the frame above the surface of the insert. Then later, the frame can be sanded down without sanding through the thin veneer on the insert. This also means you have to know the exact thickness of the insert before cutting this rabbet. The insert is discussed in the next section, but I want to finish this part about the rabbet first.

When you've determined the depth of the rabbet, drill a pilot hole to this depth so the *outside* edge of this hole is 21¼″ from the center of the pivot hole for the trammel attachment, see Fig. 5.

Finally, rout the groove in successively deeper passes. After the groove is routed, there will be waste sections between the groove and the inside edge of the frame. These areas can be removed using a router free-hand (without the trammel attachment) and a ½″ straight bit.

THE CIRCULAR INSERT

There are two choices for the table top's center insert. The easiest way to make it is to use ¾″ hardwood plywood.

But since I wanted to use a quarter-saw white oak for the top (which is not usually available as plywood), I bought a flexible veneer and mounted it to a piece of particle board. (I used Pliant Wood Veneer, which is very easy to work with. One piece of veneer 36″ x 96″ is needed for the table top and the leaf, see Fig. 6.)

If you want to make a veneered table top, cut two pieces (24″ wide by 48″ long) out of the sheet of veneer. (The "waste" is used to make the leaf.) Then cut a 4′x4′ piece of ¾″ particle board. Spread contact cement over the surface of the particle

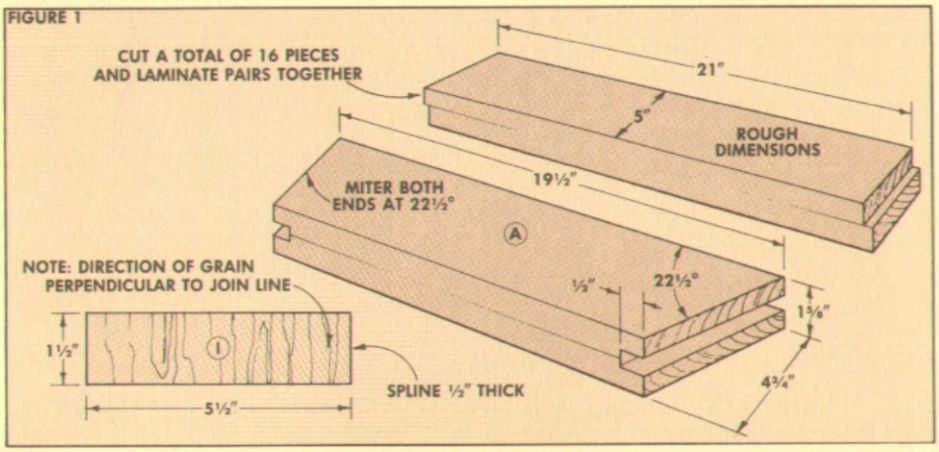

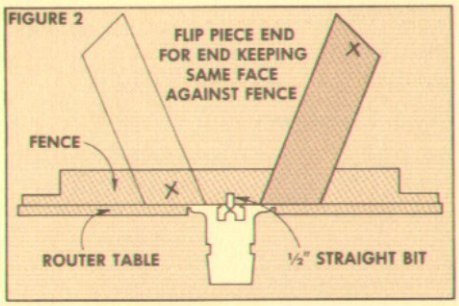

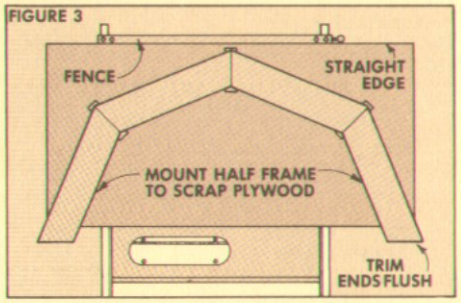

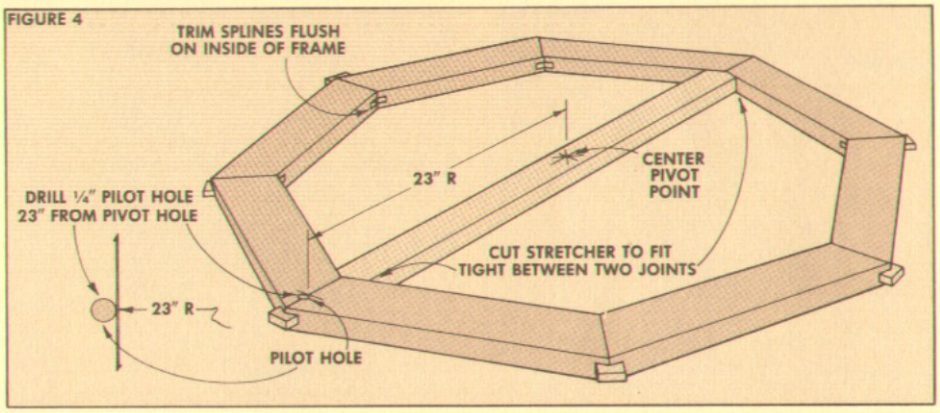

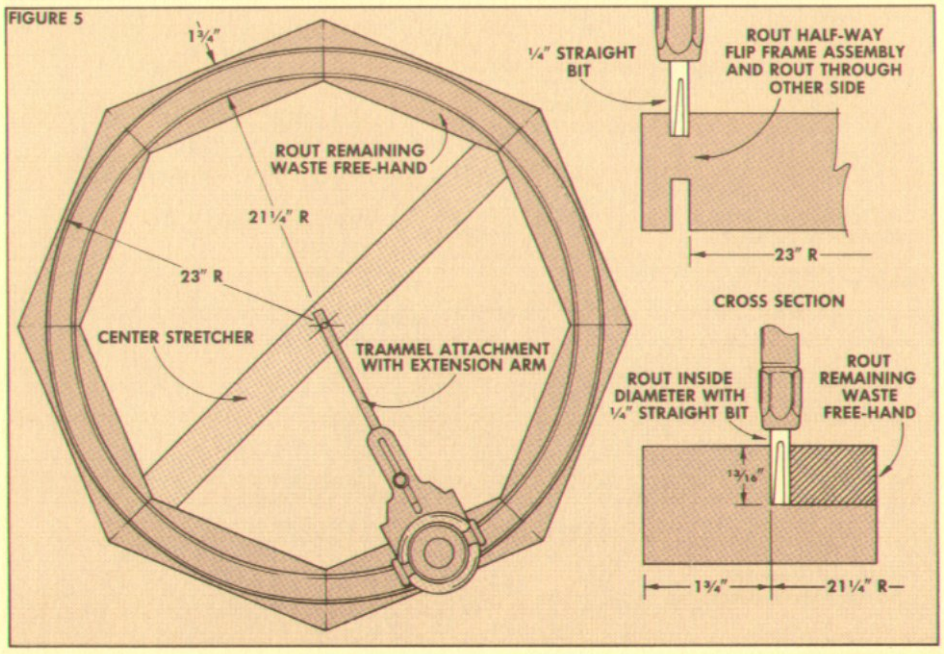

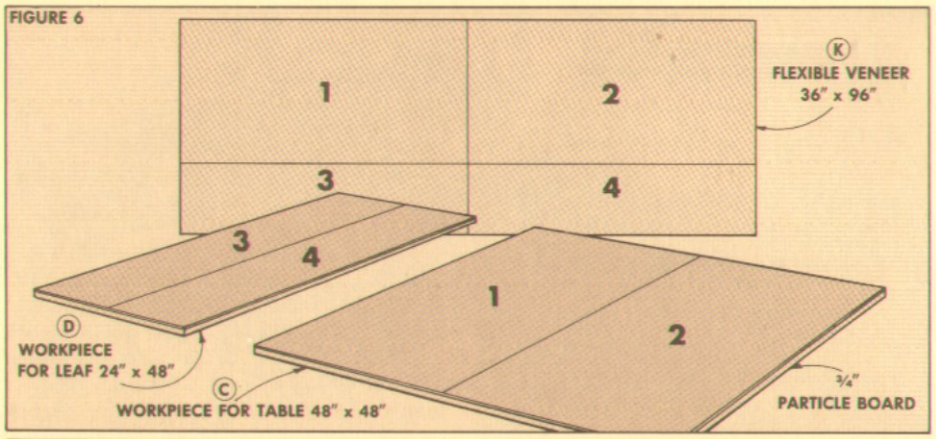

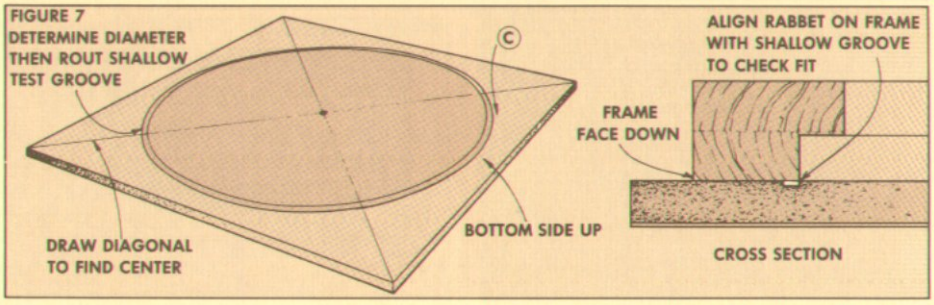

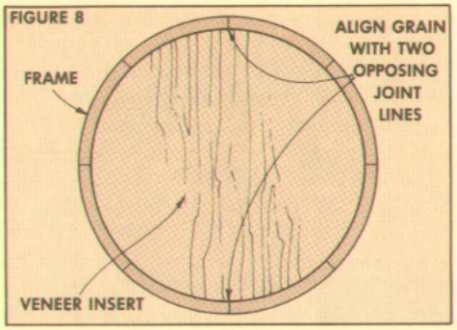

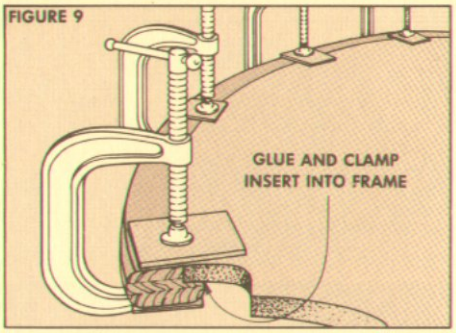

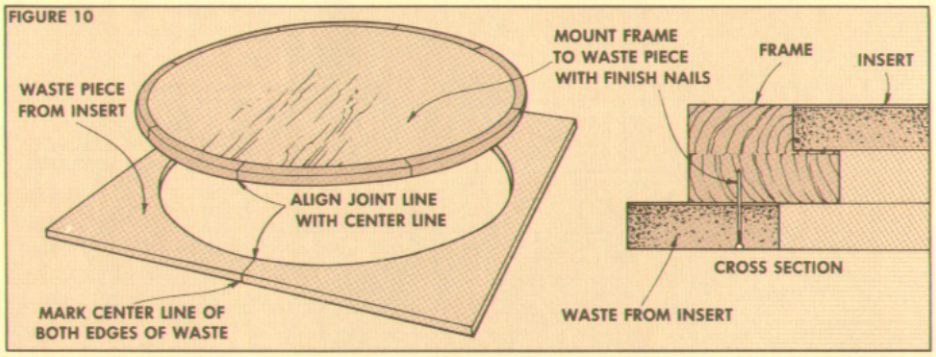

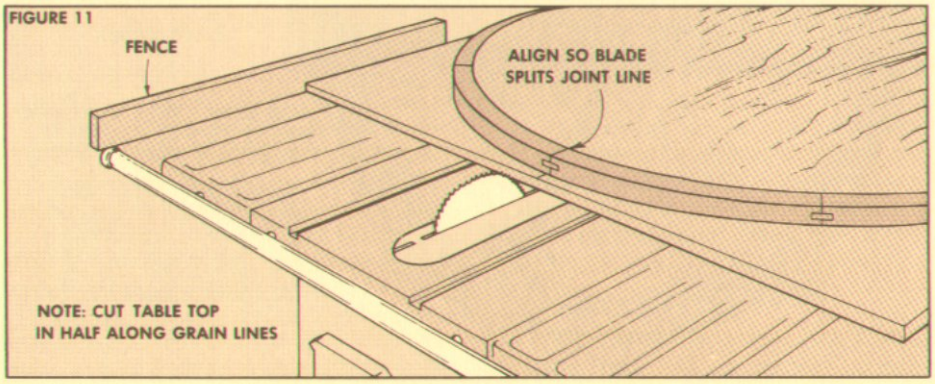

board and the veneer with a roller. Then roll out the veneer, pressing it down with a veneer roller (or a rolling pin).

CUT INSERT. Whether you use hardwood plywood or the veneered particle board, you should have a 4'x4' workpiece for the table top insert. To rout the insert, draw diagonal lines on the *back side* of the workpiece to locate the center point, see Fig. 7. Then drill a shallow hole for the pivot point of the trammel attachment.

Next, set the trammel attachment to the radius of the rabbeted area on the frame (21¼"), and make a *shallow* trial cut on the *back* (bottom) side of the workpiece.

Check this cut by laying the rabbeted side of the border frame over the scored plywood to see if the shoulder of the rabbet touches the outside edge of the scored groove, see Fig. 7. Make any adjustments necessary so the outside edge of the groove is just a hair less than the rabbet.

When you've got the right diameter for the groove, drill a ¼" pilot hole on the edge of the trial groove so the bit can be lowered to make successively deeper passes. Then rout the circular insert. (When you're done, save the outer waste piece. It will be used later.)

ASSEMBLY. After the insert is routed, glue it to the rabbet in the frame, using C-clamps to secure it in place, see Fig. 9. Note: Be sure to align the grain of the insert with two opposing joint lines on the frame, see Fig. 8. When the glue is dry, sand the frame so it's flush with the face of the insert.

CUT TABLE TOP IN HALF

Since I wanted to add a leaf to this table, I had to divide the top into two halves. To do this, use the outer waste piece left over from routing the circular insert.

Mark lines on this waste piece so the lines divide it in two equal halves, see Fig. 10. Then tack the table top to this waste piece (tack from the bottom side), making sure two opposing joint lines of the frame are aligned with the lines marked on the waste piece.

CUT IN HALF. This whole set-up can now be ripped in half on a table saw. Set the fence so the blade splits the marked lines on the waste piece, see Fig. 11.

LEAF CONSTRUCTION

Adding a leaf to this table is fairly easy. Rip a piece of hardwood plywood to a width of 18½" and to length to match the diameter of the insert. (If the insert is to be veneered, cut a piece of particle board to size and laminate the veneer to it.)

BORDER. This leaf receives the same laminated borders as on the table top. Rough-cut four pieces of 4/4 stock 18½" long and 3" wide, and laminate them to form the two borders. When the glue is dry, trim them to a final width of 2¾".

Then cut a 1"-wide rabbet on one edge of each piece, see Fig. 12.

Glue and clamp the leaf into the rabbets of these pieces. Then rip the entire leaf to final width of 18". (Here it's best to rip an equal amount from both edges to get two parallel edges.)

ALIGNMENT SPLINES

Since the table top is split in half, some provision must be made to align the two halves, and also to align the leaf (when it's used) with the table top. To accomplish this, I used splines mounted in slots.

Mark the positions of four slots on each exposed edge of the table top and the leaf, see Fig. 15. (There are 16 slots in all.) To rout the slots, I used the jig shown on page 22. Clamp one of the sliding wings to the edge of the table, and rout the slots, see Fig. 13.

Next, cut splines to fit the slots so the grain runs across (perpendicular) to the joint lines. Glue four of these splines on one edge of the table top (to align the two halves of the table), and glue the other four splines to one edge of the leaf (to align it when it's used). Bevel the leading edge of these splines so they slide into the opposing slots easily.

ROUND THE EDGES

To complete the table top, I rounded all the edges. Position the leaf between the two halves of the table and draw them together. Then lay this assembly *face down* on a work surface.

Now rout the inside edge of the frame with a ⅜" round-over bit and pilot, see Detail in Fig. 15. Next, switch to a ½" round-over bit and pilot to round over the outside edge of the frame. Then flip the table top over and rout the top edge of the border, also with a ½" corner-round bit.

MOUNTING EXTENSION SLIDES

The last step on the table top is to mount the extension slides. (I used a set of wooden slides, see Sources, page 24.)

To mount the extension slides, place the two halves of the table top face down on a work surface, and push them together. Then align the slides so they're 24" apart and exactly perpendicular to the joint line, see Fig. 16.

The slides I bought have pre-drilled mounting holes. I marked their position on the bottom of the table top, drilled pilot holes, and then screwed the extension slides in place. Note: As the slides are screwed in place, make sure they're parallel and exactly 90° to the joint line. If slides are out of kilter, they will bind as the table halves are pulled apart.

As a final check, insert the leaf and close the table halves. I had to adjust the slides a little to get the top halves to close tight against the leaf.

FIGURE 12

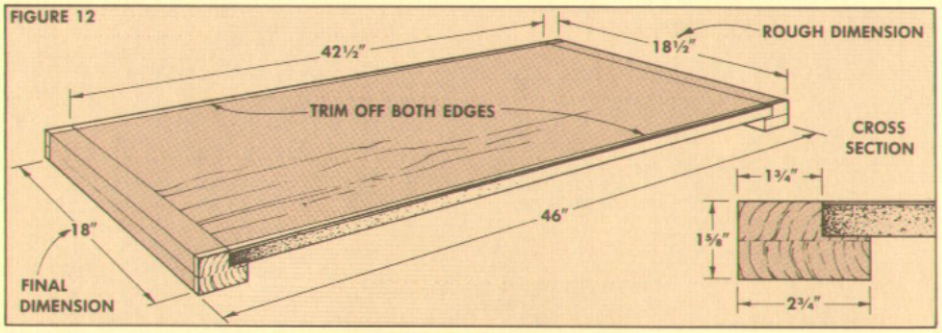

FIGURE 13

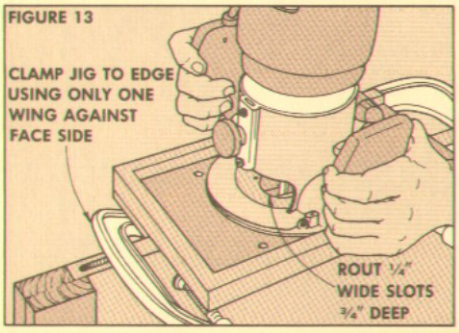

FIGURE 14

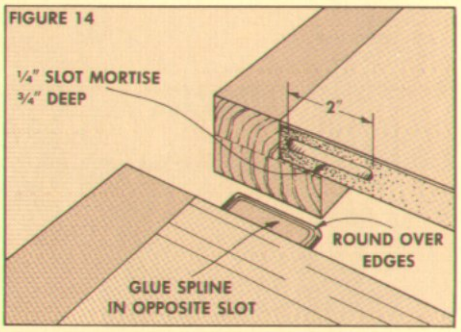

FIGURE 15

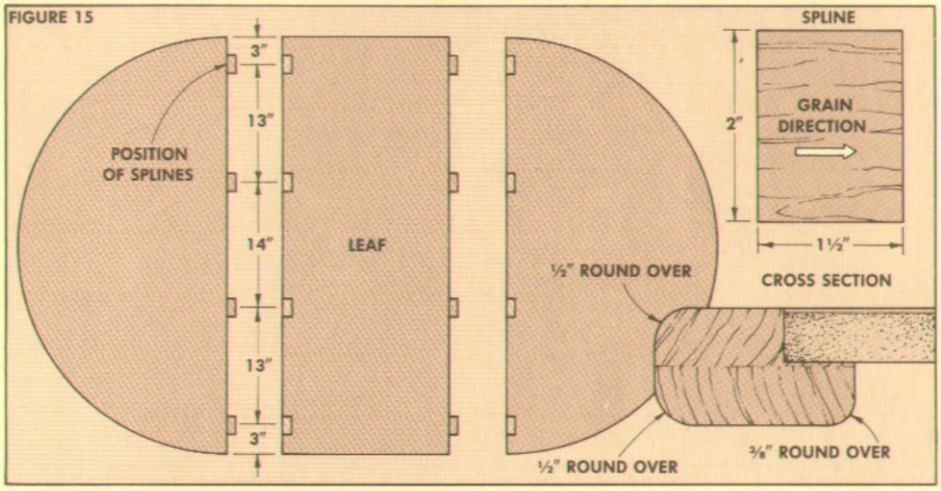

FIGURE 16

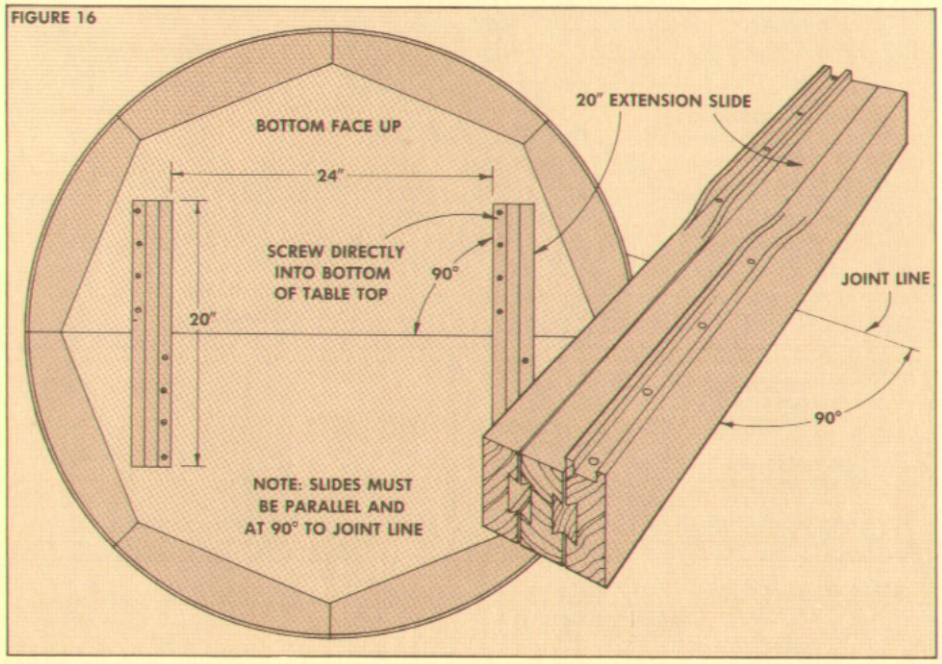

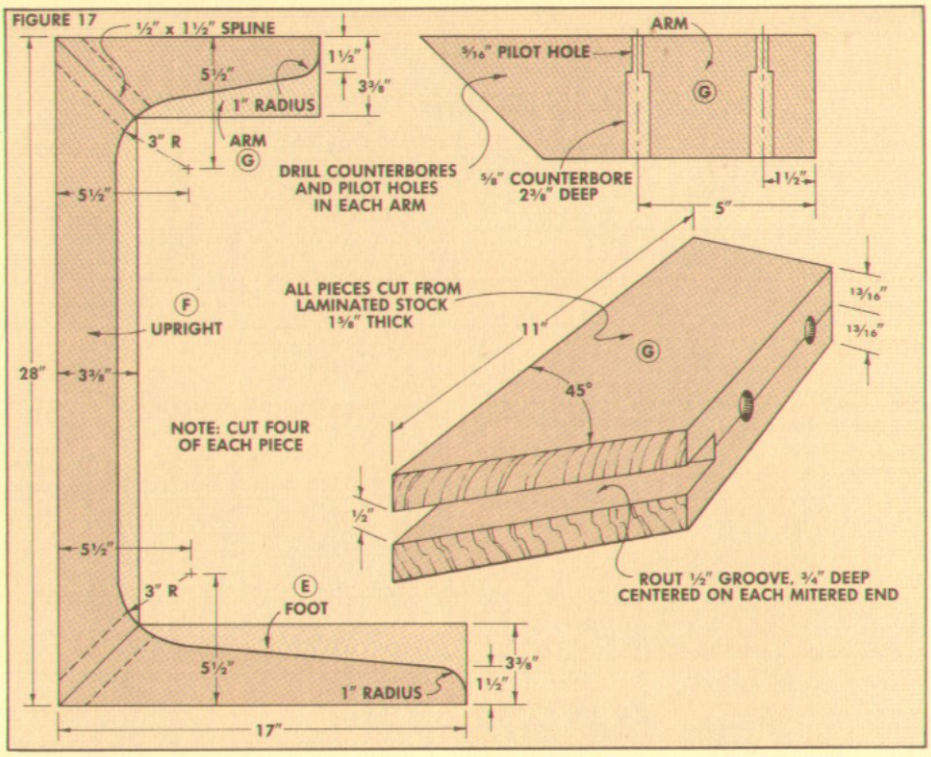

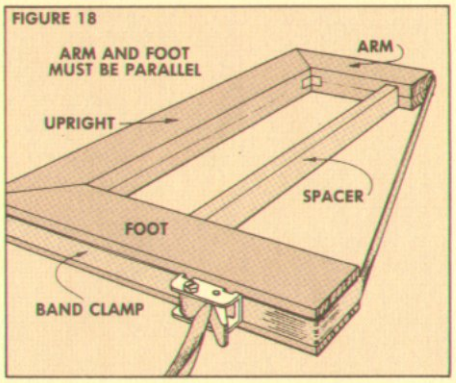

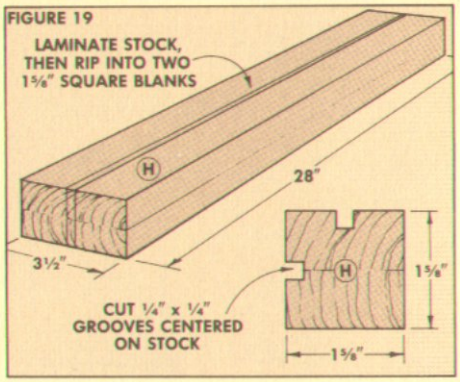

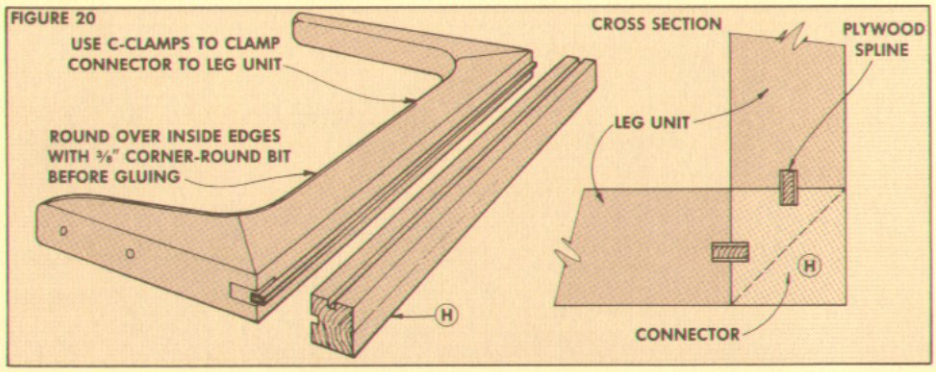

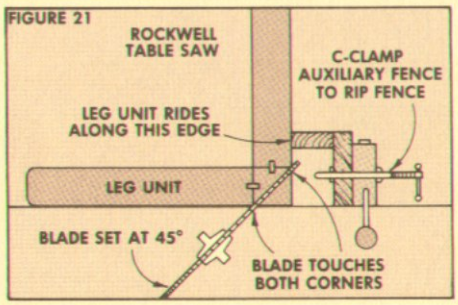

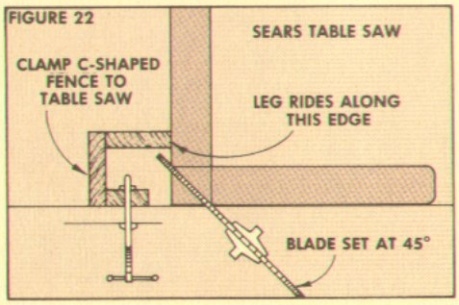

BASE UNIT CONSTRUCTION

Once the table top is complete, all it needs is a base to rest on. The problem here is to construct a base that can be separated when the table top is pulled apart (for the leaf).

The base I made consists of four C-shaped leg units that are joined together in pairs and then attached to the two halves of the table top, refer to Fig. 23. When the table top is pushed together, the legs form a four-leg pedestal. And when the table top is separated to insert the leaf, the legs also separate to support the extended version of the table, refer to Fig. 24.

C-FRAMES. To build this double-duty base, I made four C-frames. Each C-frame consists of three parts: an arm, an upright, and a foot, see Fig. 17. To get the thickness I wanted (1⅝") for these parts, I rough cut two pieces of 4/4 stock for each part, and laminated them together.

CUT MITERS. After all the pieces are laminated, trim them to a final width of 3⅜". Then cut 45° miters on only one end of the arms and feet, and straight-cut the other end so the final length of the arms is 11" and the feet are 17" (measuring to the long point of the miter).

For the uprights, cut 45° miters on both ends so the final length is 28" from long point to long point.

GROOVES AND SPLINES. Then, to assemble the C-frames, join the mitered ends of the arms and legs to the uprights with splines. First, cut ½"-wide through grooves centered on the mitered ends of each piece. (Once again, I marked the face side of each piece and cut the grooves on a router table, keeping the face side against the fence for every cut, refer to Fig. 2.)

Then the splines are cut to fit the grooves. (Note: Cut the splines so the grain runs perpendicular to the joint line.)

HOLES IN ARMS. Before assembling the C-frames, I counterbored holes in the arms for 1½" machine screws and washers, see Fig. 17. (The machine screws will be used later to hold the table top to the base.)

ASSEMBLY. Now the C-frames can be assembled. The important thing here is to make sure the arms and feet are parallel. To do this, cut a spacer piece to fit between the arm and leg, see Fig. 18.

After testing the fit (and the clamping procedure), apply glue to the miters and splines and use a band clamp to hold the assembly together while the glue dries.

CUT LEGS SHAPE. After the glue is dry on the four leg units, I cut them to their final profile. This is simply a matter of rounding the inside corners (where the splines are) to a radius of 3½", and then tapering the arms and feet down to a width of 1½", see Fig. 17.

To ensure all four C-frames would be the same, I drew the rounded corners and

tapers on a piece of cardboard, cut it out, and then traced the pattern on each C-frame.

Then cut the pattern on a band saw and sand the edges smooth. Finally, round over the edges on the *inside* of the C-frame with a ⅜" corner-round bit and pilot.

CONNECTING THE LEG UNITS

Now comes the tricky part. The leg units are joined together to form two 90° assemblies. This is accomplished with a connector piece between the C-frames.

CONNECTORS. To make the connectors, laminate two pieces of 3½"-wide by 29"-long stock together. Then rip this laminated piece into two 1⅝"-square blanks, see Fig. 19.

JOIN TO C-FRAMES. Each connector is joined to two C-frames with splines. To do this, cut ¼"-wide grooves centered on two faces of each blank. Then cut matching grooves centered on the edge of the upright on each C-frame, see Fig. 20.

SPLINES. Next, cut ¼" plywood splines to fit the grooves. Then glue and clamp two C-frames to the connector. As the clamps are tightened, make sure the C-frames are at 90° to each other, and the top edges of the arms and bottom edges of the feet are flush.

BEVEL EDGE. The last step is to bevel rip the connectors at 45°. This simple operation creates a real headache. Making this cut requires the use of an auxiliary fence to guide the C-frame.

On a Rockwell saw (where the blade tilts to the right) an L-shaped fence is attached to the rip fence, see Fig. 21. On a Sears saw (where the blade tilts to the left) a separate C-shaped fence is clamped to the left of the blade, see Fig. 22.

After the auxiliary fence is attached, the connector is bevel ripped at 45° so the blade just touches the corners of the uprights, see Fig. 20.

ATTACH LEGS. Now the two leg assemblies can be joined to the table top. With the table top upside down and the two halves pushed tightly together, center the two leg units on each half of the top. Then mark the position of the mounting holes (that were drilled in the arms earlier), see Fig. 23. Remove the leg units and drill holes for ¼" threaded inserts, see Fig. 25. Then mount the leg units to the top with 1½" machine screws and washers.

FINISHING

I used Sutherland-Welles Tung Oil Polyurethane mixture to finish the table top and base. If there's a void between the table top's border frame and the insert, it can be filled with a mixture of fine sawdust and the tung oil/polyurethane finish. Then I applied three coats of the finish to the entire table according to the instructions on the can.

FIGURE 23

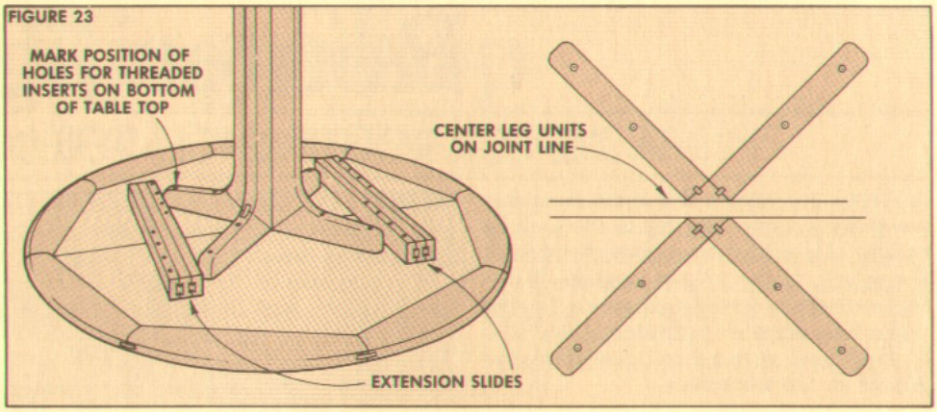

FIGURE 24

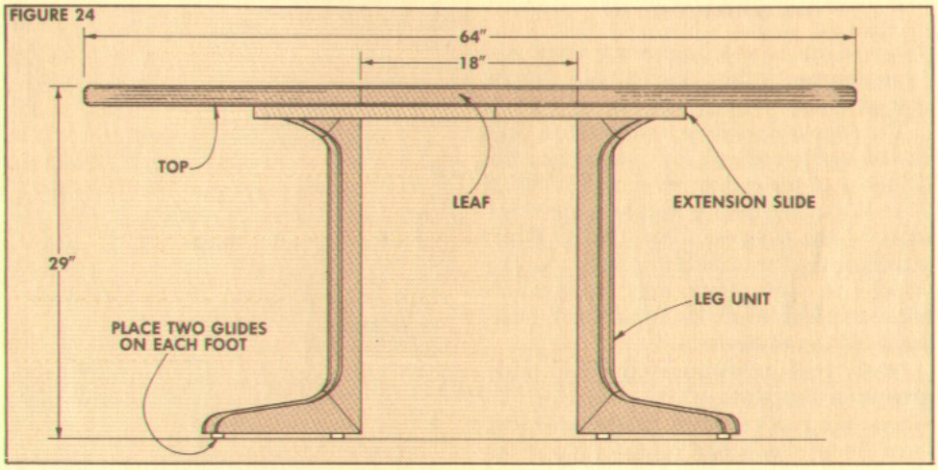

FIGURE 25

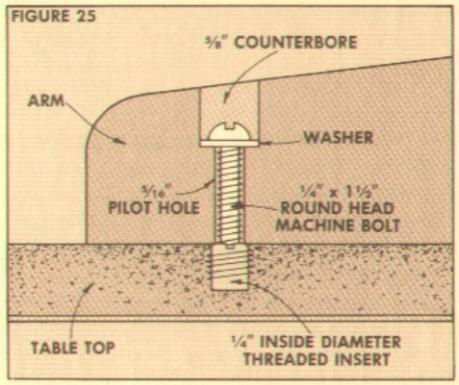

MATERIALS LIST

For Table Top:	
A Table Frame (16)	13/16 x 4¾ - 19½
B Leaf Frame (4)	13/16 x 2¾ - 18
C Table Top Insert	¾ x 48 - 48
D Leaf Insert	¾ x 18 - 48
For Base:	
E Feet (8)	13/16 x 3⅜ - 17
F Uprights (8)	13/16 x 3⅜ - 28
G Arms (8)	13/16 x 3⅜ - 11
H Connectors (4)	13/16 x 1⅝ - 28
I Frame Splines (16)	½ x 1½ - 5½
J Table Splines (16)	¼ x 2 - 1½

CUTTING DIAGRAM

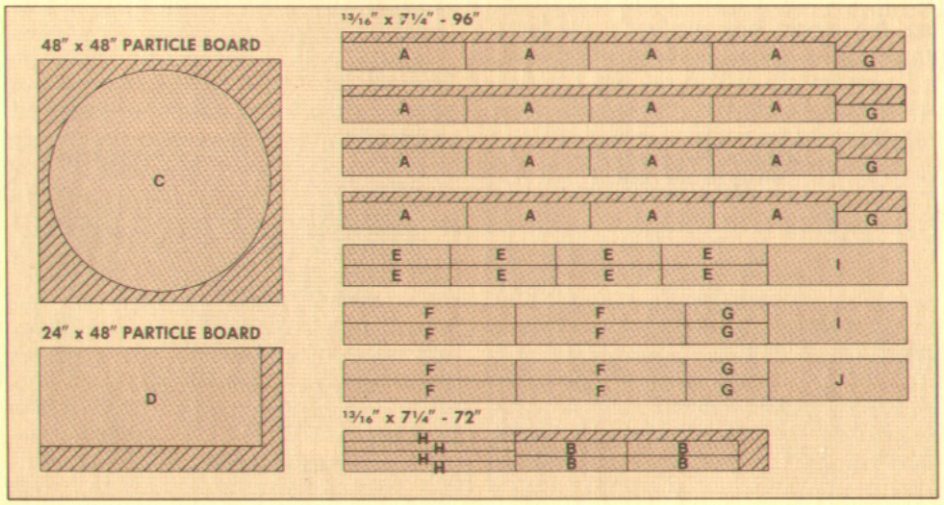

Router Jig

A JIG FOR ROUTING CENTERED GROOVES

All three projects in this issue use miter and spline joinery. The key to successfully making this joint is to cut the grooves for the splines in the proper location. To do this accurately, I used a simple routing jig that can be adjusted to fit stock from ½" to 3" thick and automatically centers the groove on the workpiece.

BUILDING THE JIG

The routing jig can be broken down into two major parts: the plywood base, and the two adjustable wings, see Fig. 1.

The plywood base is constructed with ½"-thick plywood cut 1½" wider than the diameter of the router base, and 13" long. Then ¾"-wide fences are attached to three sides of the plywood base. Note: When attaching the two side fences, they must be parallel to each other, and the distance between them must be equal to the diameter of the router's base.

Next, rout a double-stopped ½"-wide groove in the plywood base. To do this, plunge the router so the groove starts 4" from the open end, and continues until the router base contacts the back fence.

WINGS. Next, the two adjustable wings are added to the bottom of the plywood base. These wings are constructed with ½" plywood, and solid wood "pinchers," see Fig. 1. The plywood pieces are slotted by drilling end holes, and using a sabre saw to remove the waste. Then they're glued and screwed to the solid wood pinchers.

Finally, screw threaded inserts in the base, Fig. 1, and attach the wings with 1" pan head screws and washers.

THE SETUP

Before the jig can be used, the wings have to be adjusted for the thickness of the workpiece, while at the same time, keeping the workpiece perfectly centered under the ½" groove in the plywood base.

To accurately set up the jig, I used a setup block (*made from the same stock as the workpiece itself*) that has a perfectly centered tongue on one edge. Cut this tongue by placing alternate sides of the block against the fence of the table saw (see Fig. 2). Sneak up on the cuts until the tongue fits the groove in the jig.

Then to set the adjustable wings of the jig, place the setup block between the wings, with the tongue in the ½" wide groove, see Fig. 3. Pinch the wings against the sides of the setup block with C-clamps, and tighten the four screws.

USING THE JIG

Once the jig is built, make a trial cut in a piece of scrap to see where the router bit stops when the router base contacts the back fence. Mark the end of this stopped groove on the base, and position the workpiece using this mark. Then clamp the entire assembly in a vise, see Fig. 4.

Finally, position the router on the jig with the router bit in the groove, just ahead of the workpiece. Start the router and feed it into the workpiece until the base contacts the end of the jig.

DOUBLE-STOPPED GROOVES. To use the jig for routing a double-stopped groove, clamp an additional stop to the open end of the plywood base. Then make a plunge cut to start the cut, and slide the router back and forth to complete the groove.

FIGURE 1

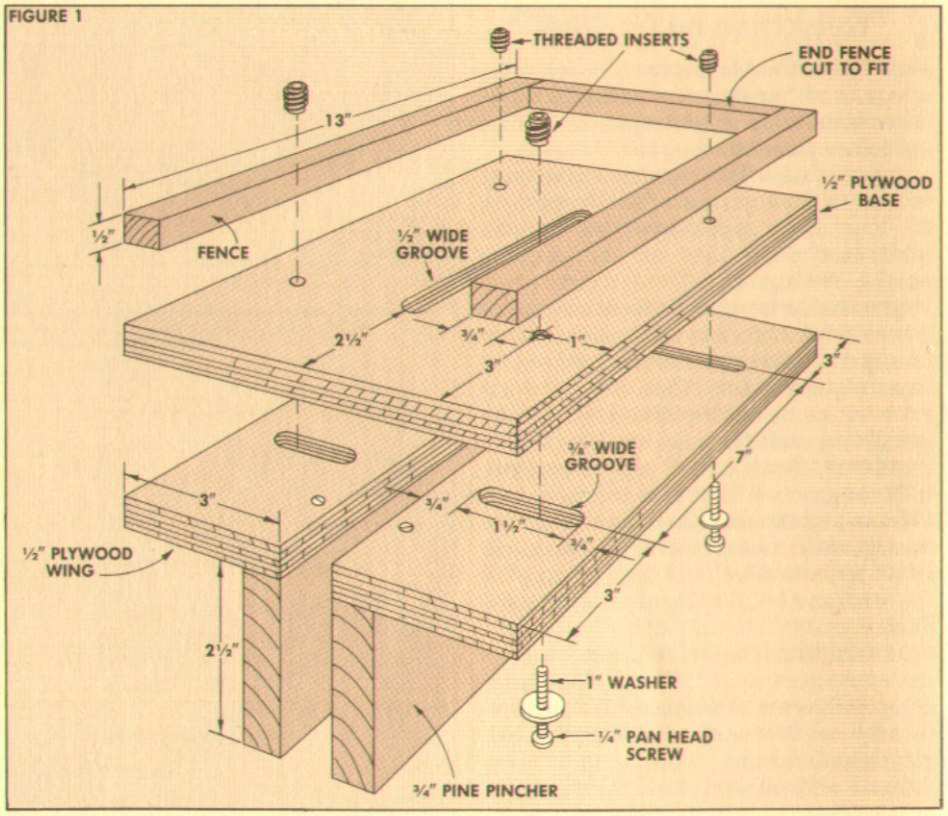

FIGURE 2

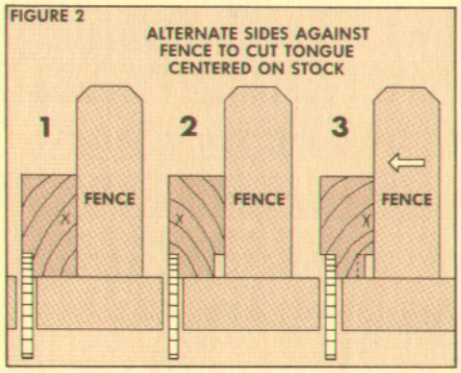

FIGURE 3

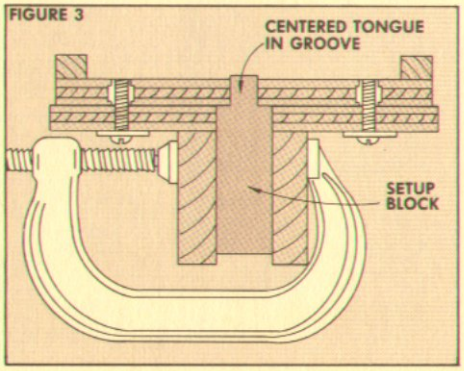

FIGURE 4

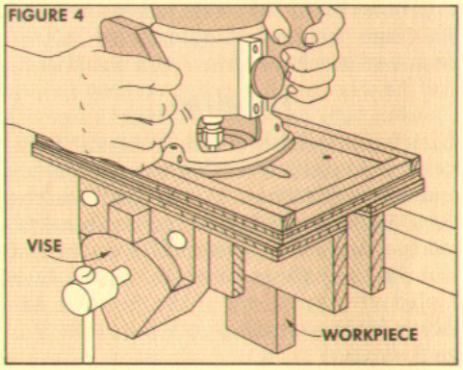

Talking Shop

AN OPEN FORUM FOR COMMENTS AND QUESTIONS

THE SHRINKING TIME MACHINES

Several readers have written to tell us that the clock movements we recommended for the Schoolhouse clock (*Woodsmith* No. 21) and the Mantel clock (*Woodsmith* No. 24) are too large (according to the dimensions given in the catalogs).

Most of the confusion about whether or not the movements will fit comes from the fact that the catalogs don't always provide the correct minimum "inside dimensions" required. Some of the measurements in the catalogs are slightly exaggerated to guarantee enough room for a proper fit, or the "overall" dimensions are given, rather than the minimum inside dimensions.

To eliminate these problems, I've found it's best to purchase the movement first. Then it can be measured to determine the actual dimensions needed for the clock case — before the case is built.

However, I did go back and double-check all of the conflicting dimensions and found that the movements we recommended do fit the dimensions of the clock cases as shown in our plans.

For the Schoolhouse clock, we listed two sources: the Klockit catalog, and the Mason and Sullivan catalog. The Klockit movement is a small battery operated quartz movement, #CS-16, with a 15½" pendulum (which was originally listed as 16"), priced at $26.95.

The Mason and Sullivan movement is a key wind "Bim Bam" calendar movement, #3341X, that comes with a 14½" pendulum, and is currently priced at $67.00.

For the Mantel clock, we used Mason and Sullivan's Westminster Chime movement #3600X, ($89.00). Again, according to the dimensions listed in the catalog, this movement shouldn't fit. But it does . . . with room to spare.

PLYWOOD TIPS

Could you tell me what to look for when buying hardwood plywood?

David Klatt
Upland, Indiana

There are several different things to look for when buying hardwood plywood: the face veneer, the core construction, and the actual thickness. But after all the different factors have been weighed, choosing a panel often comes down to the quality of the face veneers.

FACE VENEERS. The veneers used on the face of the plywood are graded with a standard grading system. The highest quality veneers commonly available are "A" grade. The next lower grades are called #1, #2, #3, #4, respectively.

Usually, even the highest quality hardwood plywood has only one side that's faced with an "A" grade veneer. Then the opposite side is faced with a veneer in a slightly lower grade.

"Good one side" (G1S) is another designation that's commonly used on thin (usually ¼" or less) plywood. This designation is most often used on imported plywoods that haven't been graded to U.S. standards. In this case, the quality of the "good" side can vary from good to excellent. The back face veneer is usually very low quality, and can even be of a different species than the face veneer.

Another designation that's worth noting is "Shop Grade," which basically means factory seconds. (They're priced accordingly.) In some cases, a high quality panel is down-graded to "Shop Grade" for a very small defect. In other panels, there may be a major flaw. But in every case, there is a defect that may or may not be visible.

Although the face veneers are usually the biggest concern, the interior core is also important.

THE CORE CONSTRUCTION. There are several common methods of core construction: veneer core, lumber core, particle. Veneer core construction consists of laminating individual layers of veneer to build up the core. And generally, the more plys (layers) that are used, the more stable the panel. This method of construction by far accounts for the majority of the plywood sold.

Another common core construction method is called "lumber core." This method uses narrow strips of solid wood to build up the center. This type of core is more likely to warp, and is more expensive than veneer core plywood.

There's an advantage to using lumber core plywood when the edges of the panel need to be shaped. The solid-wood core that's exposed is much easier to stain and finish than the layers of veneer found in veneer core plywood.

Another, even lower quality core construction method is called particle board core. This method consists of using one of the many forms of particle board as the core. The problem with this method of core construction is that it has very little stiffness, strength, or screw holding power.

THICKNESS. The biggest problem with buying hardwood plywood is that it's rarely the *actual* thickness that's designated. There are two reasons for this.

First, the industry has created a set of standards that allows a certain amount of variation in the actual thickness of hardwood plywood. This is usually the reason for any variation in the thicker (⅜" and up) panels.

The second reason for variation in thickness is that most of the thinner plywood (in fact, 75% of *all* plywood) is purchased from oriental manufacturers who designate the thickness in millimeters rather than inches. Although they're close to the inch designations, the variation can drive you batty if it hasn't been taken into account.

So to be safe, always measure the thickness of the actual piece of plywood that's going to be used, before it's too late.

FLYING CANISTERS?

After reading the article on stave construction in Woodsmith No. 25, I feel that you should warn your readers that this is an extremely dangerous method of "gluing up" stock for wood turning.

The joints have to be well made and properly clamped, not just held together by hand as you suggest.

Although stave construction produces beautiful pieces, and saves material and money, the risk of injury is very high.

Fred Zuald
Grand Rapids, MI

Stave construction, in our opinion, doesn't pose any excessive danger to a wood turner, as long as a few basic precautionary steps are taken. And the first step is to *always* wear a face shield. This alone can prevent serious injury if the stave-constructed cylinder happens to separate.

The other precautionary step is to be sure the cylinder is built with good solid joints. For stave construction, that means *without* clamps. The problem is that if the individual staves are clamped together, the clamping action can actually pull the joints apart if the bevels aren't perfectly cut. This can cause a serious problem if it goes undetected.

I feel the best way to produce a solid joint using stave construction is to use hand pressure to glue the individual staves together, because you can feel if the joint is off as the glue takes hold.

But the bottom line is this: Always be prepared for the worst. I'm comfortable with stave construction . . . but I *always* wear a face shield.

Sources

With this issue, for the sake of convenience and space, we've started printing the complete addresses for mail order supply houses only once — at the end of the page instead of with the ordering information for each specific project. Here goes:

ROUND TABLE

I ordered all of the hardware for the round table from the Woodworker's Store. The 20"L x 2"H (26" maximum opening), wooden extension slides are catalog number D-4500 (wood), $12.75 per set.

The nylon glides for the feet are catalog number C-1404-⅞", 38¢/set of 4 (two sets are needed).

I purchased the 36" x 96" flexible white oak veneer at a local hardwood store, but similar products are available from The Woodworker's Store, Craftsman, and Constantine's.

CHEVAL MIRROR

The hardware for the cheval mirror is from the Woodworker's Store. The order number for the 2⅝" long Swivel Mirror screws is D-7480, $5.95/pair.

I also used a flexible plastic panel retainer strip (the staple type) to mount the mirror. The order number is D-2704 for Fruitwood. The panel retainer costs 25¢/foot and you'll need about 12 feet.

The mirror itself cost $32.00 at a local glass store; we thought it was worth $12.00 labor charges to have them cut the mirror to final shape. Total cost: $44.00.

ROUND CLOCK

I ordered the quartz movement and the face and bezel for the round clock from Craft Products Company.

The 9⅞" brass bezel/dial set I used is catalog number 2831-K50 (Roman numerals) and costs $19.90.

The Craft Ultra-Thin Quartz Movement is catalog number 2325-X01 (this movement fits the ¼" plywood insert in the project), $5.95. The hands are included free with the quartz clock movements, but you have to indicate which style you want. We used catalog number 2431-K44.

OIL FINISHES

Oil finishes are easy to find — they're sold in hardwood, lumber, and unfinished furniture stores, as well as national and regional discount centers. But, in a couple of cases, the oil finishing products we talked about are not generally available at retail outlets.

Sutherland Welles tung oil products are available from the Garrett Wade Company. Behlens products are available from Garrett Wade and The Wood Finishing Supply Company.

If you're having a hard time locating a specific brand, you can call the manufacturer or wholesaler — their names and addresses are listed on page 15.

WOODWORKING CLUBS

WORLD OF WOOD ASSOCIATION OF WOODWORKING. This group was created by the Ganahl Lumber Company of Anaheim, California, for its customers.

Membership in W.O.W.A. costs $15.00 per year and the benefits of membership include discounts at the lumber store, free admission to a monthly lecture series, and a subscription to a monthly newsletter, *The World of Wood News Brief*.

For information about joining, contact Jim Nash, Ganahl Lumber Company, 1220 East Ball Road, P.O. Box 31, Anaheim, CA 92805 or call 714-772-5444.

YET TO BE NAMED WOODWORKING CLUBS. We've heard from three woodworking clubs so newly formed they hadn't had time to pick a name yet.

Burlington, IA. Dwight Mulch, President of the club in Burlington, Iowa, invites woodworkers in Southeast Iowa and West Central Illinois to the group's meetings every third Thursday at the Burlington Public Library.

Dwight would also like to hear from other clubs about any aspect of forming a woodworking club. Contact him at 2636 South Main, Burlington, IA 52601.

Vancouver, WA. Don Schie is one of eleven members of a new woodworking club in Vancouver, Washington. He says they've had several meetings to discuss their goals. He'd like to hear from other clubs about how to get started.

They'd like help with their by-laws, applications, and some advice about whether or not to incorporate. Don's address is 1409 NE 127 Street, Vancouver, WA 98665.

St. Louis, MO. Finally, Bruce R. Denslow, the President of The Wood & Shop, a St. Louis retail store selling hardwood lumber, tools, and other related items is trying to find enough members to form a woodworking club. Bruce says if woodworkers in the area are interested, he'll be glad to help get the club started.

For more information, contact Bruce at The Wood & Shop, 5605 North Lindbergh, St. Louis, MO 63042 or call 314-731-2761.

GREEN COUNTRY WOODWORKERS CLUB. This Tulsa, OK, club has about 90 members, many of whom are Shopsmith owners. There are eleven meetings and newsletters each year — all included in the $10 annual membership fee.

The group meets the fourth Thursday of the month at the Tulsa Vo-Tech School. For more information contact Dean Hawley, President, 4020 South Birmingham, Tulsa, OK 74105 or call 918-743-2024.

WOODCRAFTERS. This club is located in Tampa, Florida and usually limits the size of its membership. Now, however, there are some openings for members. The club meets one night per month at a local junior high school woodworking shop.

For more information, contact President Gordon Palmer, 3103 Lawn Avenue, Tampa, FL 33611.

THE WOODWORKERS CLUB OF HOUSTON. Bill Beggs is President of this club which is less than a year old, but has already grown from 23 to more than 40 members. Annual dues are $7.00, and the group's monthly meetings feature a class or a demonstration of a woodworking technique.

For more information, contact Bill Beggs, 7367 Antoine, Houston, TX 77088.

KERSHAW COUNTY WOODWORKERS ASSOCIATION. Bob Stamm, Camden, SC, is the secretary/treasurer of this group of 46 woodworkers who get together monthly at the county vocational center (where they also get to use the tools).

Bob says he'd like to hear from other clubs about good program ideas. And if you want to join, contact Bob Stamm, 2109 Richardson Road, Camden, SC 29020.

FOREST CITY WOODCRAFTERS. Bryan Worthington writes to say that his "fledgling" organization of woodworkers in the Rockford, Illinois, area is in need of members and astute leaders, plus suggestions for good — but free — program material.

If you're any of the three, contact Bryan at 5204 Marion Avenue, Rockford, IL 61108 or call 815-229-5854.

ADDRESSES

The Woodworkers' Store, 2801 Industrial Boulevard, Rogers, MN 55374, 612-428-4101.

Craft Products Company, Mail Order Division, 2200 Dean Street, St. Charles, IL 60174, 312-584-9600.

Garrett Wade Company, Inc., 161 Avenue of the Americas, New York, NY 10013, 1-800-221-2942 (AK, HI, and NY call 212-807-1757).

Wood Finishing Supply Company, 1267 Mary Drive, Macedon, NY 14502, 315-986-4517.

Craftsman Wood Service Co., 1735 West Cortland Court, Addison, IL 60101, 312-629-3100.

Constantine's, 2050 Eastchester Road, Bronx, NY 10461, 1-800-223-8087.